Protected by copyright. Copying for private or commercial purposes, in part or in whole, is not permitted unless authorised by Volkswagen AG. Volkswagen AG does not guarantee or accept any liability with respect to the correctness of information in this document. Copyright by Volkswagen AG.

Caddy 1996 , Polo Classic 1996 ➤

5-Speed manual gearbox 02A									
Gearbox ID	ASD	CTN							

Edition 01.2000

satelettronica

List of Workshop Manual Repair GroupsList of Workshop Manual Repair GroupsList of Workshop Manual Repair Groups

Caddy 1996 , Polo Classic 1996 ➤

5-Speed manual gearbox 02A

Repair Group

00 - Technical data
30 - Clutch
34 - Controls, Housing
35 - Gears, Shafts
39 - Final drive, Differential

Protected by copyright. Copying for private or commercial purposes, in part or in whole, is not permitted unless authorised by Volkswagen AG. Volkswagen AG does not guarantee or accept any liability with respect to the correctness of information in this document. Copyright by Volkswagen AG.

satelettronica

Technical information should always be available to the foremen and mechanics, because their careful and constant adherence to the instructions is essential to ensure vehicle road-worthiness and safety. In addition, the normal basic safety precautions for working on motor vehicles must, as a matter of course, be observed.

All rights reserved.
No reproduction without prior agreement from publisher.

Copyright © 2011 Volkswagen AG, Wolfsburg

00056406520

Contents

00 - Technical data . . . 1

1 **Gearbox identification** . . . 1
1.1 Gearbox identification . . . 1
1.2 Code letters, gearbox allocation, ratios, capacities . . . 2
2 **Transmission layout** . . . 3
2.1 Transmission layout . . . 3
3 **Calculating overall ratio (i)** . . . 5
3.1 Calculating overall ratio (i) . . . 5
4 **General repair instructions** . . . 5
4.1 General repair instructions . . . 5

30 - Clutch . . . 7

1 **Servicing clutch control** . . . 7
1.1 Servicing clutch control . . . 7
1.2 Assembly overview - Pedal cluster . . . 8
1.3 Removing and installing over-centre spring . . . 11
1.4 Removing and installing clutch pedal . . . 13
1.5 Assembly overview - Hydraulic system . . . 14
1.6 Removing and installing master cylinder . . . 17
1.7 Bleeding clutch system . . . 18
2 **Servicing clutch release mechanism** . . . 19
2.1 Servicing clutch release mechanism . . . 19
3 **Servicing clutch** . . . 22
3.1 Servicing clutch . . . 22

34 - Controls, Housing . . . 26

1 **Servicing gear selector mechanism** . . . 26
1.1 Servicing gear selector mechanism . . . 26
1.2 Installation position of gear selector mechanism . . . 26
1.3 Removing and installing gear selector cables . . . 29
1.4 Removing and installing gear stick housing . . . 35
1.5 Installing gear stick gaiter to gear stick knob . . . 38
1.6 Removing and installing gear stick . . . 39
1.7 Adjusting gear selector mechanism . . . 43
2 **Removing and installing gearbox** . . . 46
2.1 Removing and installing gearbox . . . 46
3 **Checking gearbox oil** . . . 58
3.1 Checking gearbox oil . . . 58
4 **Dismantling and assembling gearbox** . . . 60
4.1 Dismantling and assembling gearbox . . . 60
4.2 Removing and installing cover for gearbox housing and 5th gear . . . 61
4.3 Removing and installing gearbox housing and selector mechanism . . . 64
4.4 Removing and installing input shaft, output shaft (pinion shaft), differential and selector forks . . . 67
4.5 Dismantling and assembling sequence . . . 70
5 **Servicing gearbox housing and clutch housing** . . . 87
5.1 Servicing gearbox housing and clutch housing . . . 87
6 **Dismantling and assembling gearbox selector mechanism** . . . 96
6.1 Dismantling and assembling gearbox selector mechanism . . . 96
7 **Dismantling and assembling selector forks** . . . 101
7.1 Dismantling and assembling selector forks . . . 101

Protected by copyright. Copyright by Volkswagen AG. Volkswagen AG does not guarantee or accept any liability with respect to the correctness of information in this document.
satelettronica

35 - Gears, Shafts 107
1 Dismantling and assembling input shaft 107
1.1 Dismantling and assembling input shaft 107
2 Adjusting input shaft 118
2.1 Adjusting input shaft 118
2.2 Table of adjustment shims 119
2.3 Carrying out check measurement 121
3 Dismantling and assembling output shaft (pinion shaft) 122
3.1 Dismantling and assembling output shaft (pinion shaft) 122
4 Adjusting output shaft 146
4.1 Adjusting output shaft 146
5 Dismantling and assembling reverse shaft 149
5.1 Dismantling and assembling reverse shaft 149

39 - Final drive, Differential 153
1 Renewing flanged shaft oil seals (gearbox installed) 153
1.1 Renewing flanged shaft oil seals (gearbox installed) 153
1.2 Renewing oil seals on gearboxes without springs behind flanges 153
1.3 Renewing oil seal on gearboxes with springs behind flanges 154
2 Dismantling and assembling differential 157
2.1 Dismantling and assembling differential 157
3 Adjustment overview 173
3.1 Adjustment overview 173
4 Adjusting differential 173
4.1 Adjusting differential 173

Protected by copyright. Copying for private or commercial purposes, in part or in whole, is not permitted unless authorised by Volkswagen AG. Volkswagen AG does not guarantee or accept any liability with respect to the correctness of information in this document. Copyright by Volkswagen AG.
satelettronica

00 - Technical data

1 - Gearbox identification

1.1 - Gearbox identification

Copying for private or commercial purposes, in part or in whole, is not permitted unless authorised by Volkswagen AG. Volkswagen AG does not guarantee or accept any liability with respect to the correctness of information in this document. Copyright by Volkswagen AG.

The manual gearbox 02A is installed in the Caddy 1996 >, Polo Classic 1996 > and Polo Estate1997 >in conjunction with the 4-Cyl. engine.

Allocation =>Page 2 .

-> Location on gearbox

Code letters and date of manufacture (arrow 1)
Manual gearbox 02A (arrow 2)

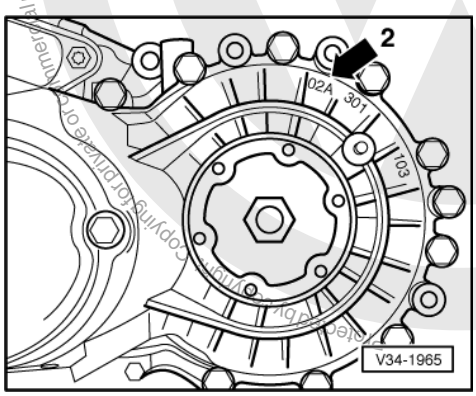

satelettronica

-> Manual gearbox 02A (arrow 2)

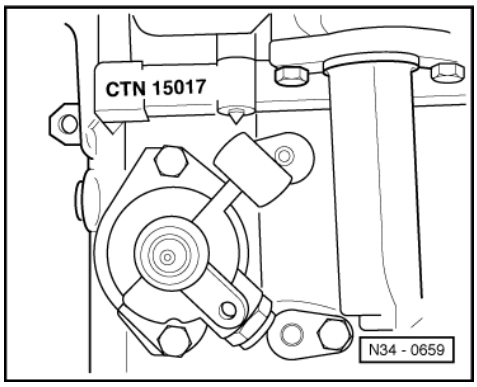

-> Code letters and date of manufacture of gearbox

Example:	CTN	15	01	7
	I	I	I	I
	I	I	I	I
	Code letters	Day	Month	Year (1997) of manufacture

Additional data depends on manufacture.

Note:

The gearbox code letters are also shown on the vehicle identification plates.

1.2 - Code letters, gearbox allocation, ratios, capacities

Manual gearbox		5 speed 02A		
Engine code		ASD	CTN	
Manufactured	from to	01.97	01.97	
Allocation	Model	Polo Classic 1996 > Polo Estate 1997 >	Caddy 1996 >	
	Engine	1.9 ltr. - 66 kW Turbo Diesel	1.9 ltr. - 66 kW Turbo Diesel	
Ratio: Z2 : Z1	Final drive	60 : 19 = 3.158	60 : 19 = 3.158	
	1st gear	33 : 10 = 3.300	34 : 9 = 3.778	
	2nd gear	35 : 18 = 1.944	36 : 17 = 2.118	
	3rd gear	34 : 26 = 1.308	34 : 25 = 1.360	
	4th gear	33 : 36 = 0.917	34 : 35 = 0.971	
	5th gear	33 : 46 = 0.717	34 : 45 = 0.756	
	6th gear	-	-	-
	Reverse gear	17 : 10 x 36 : 20 = 3.060	18 : 9 x 36 : 20 = 3.600	
	Speedometer	13 : 22 = 0.591	13 : 22 = 0.591	

Engine code	ASD	CTN	
Capacity	2.0 litre	2.0 litre	
Specification	Gear oil G50 SAE 75W90 (synthetic oil)		
Clutch control	hydraulic	hydraulic	
Clutch plate ø	228 mm	228 mm	

Volkswagen AG. Volkswagen AG does not guarantee or accept any liability with respect to the correctness of information in this document. Copyright by Volkswagen AG. This whole is not permitted unless authorised by Volkswagen AG. Copyright by Volkswagen AG.

satelettronica

Drive shaft flange ø	100 mm 2)	100 mm 2)	
iOverall ratio in top gear	2.264	2.387	

2) Springs behind drive flanges => Page 157

2 - Transmission layout

2.1 - Transmission layout

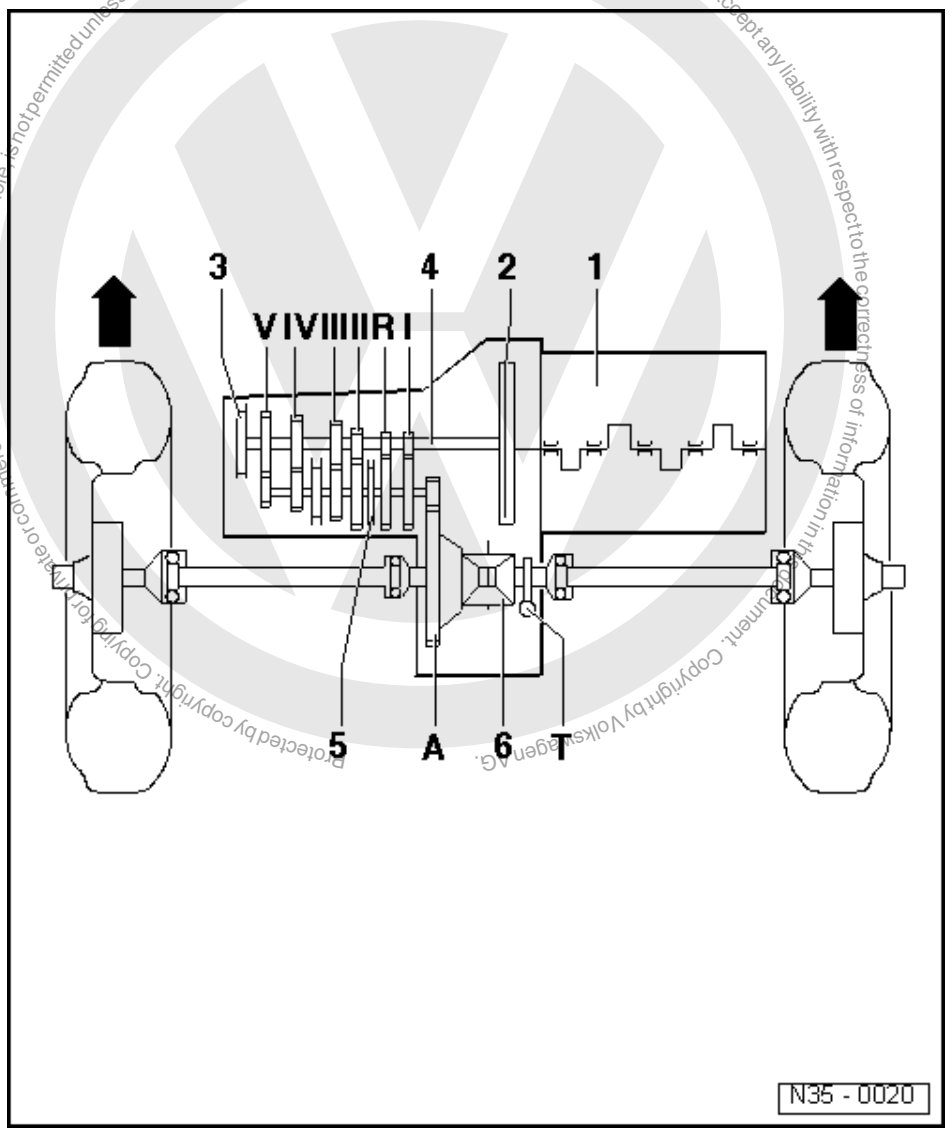

Designation

1 Engine
2 Clutch
3 Gearbox
4 Input shaft
5 Output shaft/pinion shaft
6 Differential

Protected by copyright. Copyright by Volkswagen AG. Volkswagen AG does not guarantee or accept any liability with respect to the correctness of information in this document. Copyright by Volkswagen AG. Volkswagen AG not permitted unless authorised by Volkswagen AG. Volkswagen AG does not guarantee or accept any liability with respect to the correctness of information in this document. Copyright by Volkswagen AG. Copying for private or commercial purposes, in part or in whole, is not permitted unless authorised by Volkswagen AG.

satelettronica

Arrows point in direction of travel

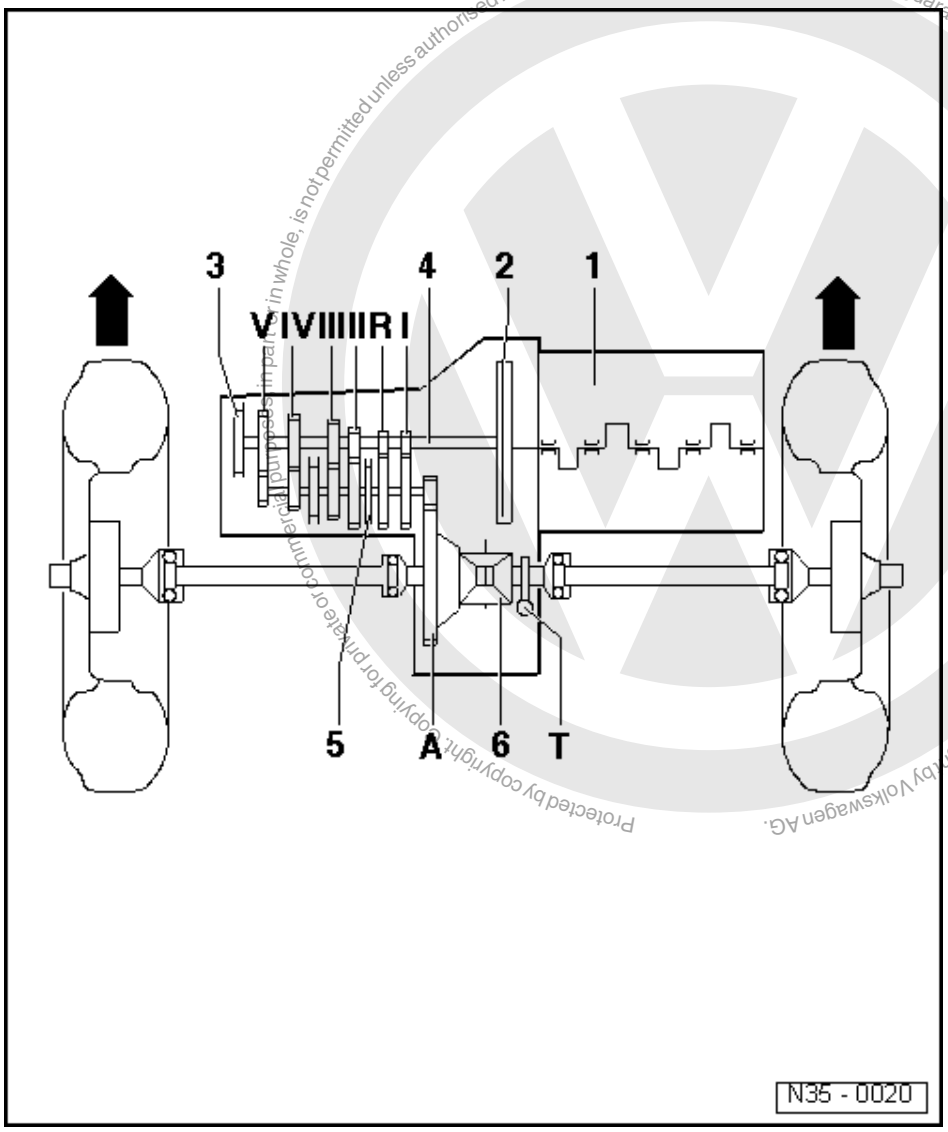

Protected by copyright. Copying for private or commercial purposes, in part or in whole, is not permitted unless authorised by Volkswagen AG. Volkswagen AG does not guarantee or accept any liability with respect to the correctness of information in this document. Copyright by Volkswagen AG.

satelettronica

Gear ratios

I - 1st gear
II - 2nd gear
III - 3rd gear
IV - 4th gear
V - 5th gear
R - Reverse gear
A - Final drive
T - Speedometer drive

Arrows point in direction of travel

3 - Calculating overall ratio (i)

3.1 - Calculating overall ratio (i)

Example:

	5th gear	Final drive
Drive gear	ZG1 = 33	ZA1 = 19
Driven gear	ZG2 = 43	ZA2 = 60

i= Z2/ Z1 1)

iG = Gear ratio = ZG2/ZG1 = 33 /43 = 0.717

iA = Axle ratio = ZA2 / ZA1 = 60 / 19 = 3.158

Overall ratio = total ratio
= iG x iA = 0.717 x 3.158 = 2.264

1) Z1 = No. of teeth drive gear, Z2 = No. of teeth driven gear

4 - General repair instructions

4.1 - General repair instructions

To ensure perfect and successful gearbox repairs, the greatest care and cleanliness as well as the use of good and proper tools is essential. Obviously, the basis rules for safety are also applicable during repair work.

A number of generally valid instructions applicable for the various repair procedures - which were previously repeated a number of times at numerous places in the Workshop Manual - are summarized here. They apply to this Workshop Manual.

Gearbox

- When installing ensure that the dowel sleeves between the engine and gearbox are correctly located.
- When changing a gearbox fill with gear oil to the lower edge of the filler hole.
- Capacities and specifications => Page 2 .

Notes:

- If the oil level is topped up with the gearbox installed, carry out oil level check as follows:
- Fill with oil to the lower edge of the filler hole and refit filler plug. Start engine, engage a gear and allow gearbox to turn for approx. 2 minutes. Switch off engine and again top-up oil to lower edge of filler hole.

Gaskets, sealing rings

- Thoroughly clean joint surfaces and apply sealant AMV 188 200 03.
- Apply sealant uniformly but not too thick.
- Renew "O-rings".
- Radial shaft oil seals.

Before installing:

Lightly oil outer edge, fill space between sealing lips with grease.

Protected by copyright. Copying for private or commercial purposes, in part or in whole, is not permitted unless authorised by Volkswagen AG. Volkswagen AG does not guarantee or accept any liability with respect to the correctness of information in this document.
Copyright by Volkswagen AG.
satelettronica

After installation:

Check gearbox oil; if necessary top-up to lower edge of oil filler hole, specification => Page 2 .

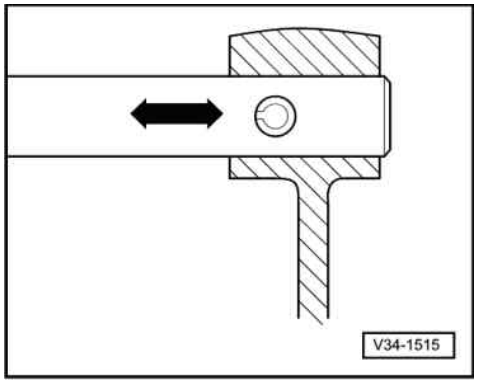

Locking devices

- Renew circlips.
- Do not overstretch circlips.
- Circlips must locate properly in the groove.
- -> Renew spring pins
  Installation position: Slot longitudinal to line of force.

Bolts and nuts

- Tighten and loosen bolts and nuts for securing covers and housings in a diagonal sequence.
- Especially delicate parts, such as clutch pressure plates, must not be distorted. Loosen and tighten bolts and nuts in stages in a diagonal sequence.
- Tightening torques as specified are for unoiled bolts and nuts.
- Renew self-locking bolts and nuts.

Bearings

- Install needle bearings with lettered side (thicker metal) towards fitting tool.
- Taper roller bearings fitted to one shaft must be renewed as a set. Use same make of bearings if possible!
- Heat inner races to approx. 100 °C before installing.
- Do not interchange outer and inner races of bearings of the same size, bearings are paired.

Shims

- Measure shims at several points with a micrometer. Tolerance variations make it possible to find the exact shim thickness required.
- Check for burrs and damage.
- Only install perfect shims.

Synchronizer rings

- Do not interchange. When reusing always fit to the same gear.
- Check for wear and renew if necessary.
- Coat with gear oil before installing.

Gear wheels

- Before installing clean and heat on a hot plate to approx. 100 °C.
- Temperature can be checked with temperature tester V.A.G 1558.

Protected by copyright. Copying for private or commercial purposes, in part or in whole, is not permitted unless authorised by Volkswagen AG. Volkswagen AG does not guarantee or accept any liability with respect to the correctness of information in this document. Copyright by Volkswagen AG.

satelettronica

30 - Clutch

Protected by copyright. Copying for private or commercial purposes, in part or in whole, is not permitted unless authorised by Volkswagen AG. Volkswagen AG does not guarantee or accept any liability with respect to the correctness of information in this document. Copyright by Volkswagen AG.

satelettronica

1 - Servicing clutch control

1.1 - Servicing clutch control

I - Assembly overview - pedal cluster
=>Page 8

III - Assembly overview - hydraulics
=>Page 14

Notes:

- Disconnect battery earth strap.
- For vehicles with coded radio obtain radio code.
- Lubricate all bearings and contact surfaces with poly resin grease part No. G 052 142 A2.
- Before working on pedal cluster remove left storage shelf.

=> Repair group 70; removing and installing dash panel removing and installing dash panel

1.2 - Assembly overview - Pedal cluster

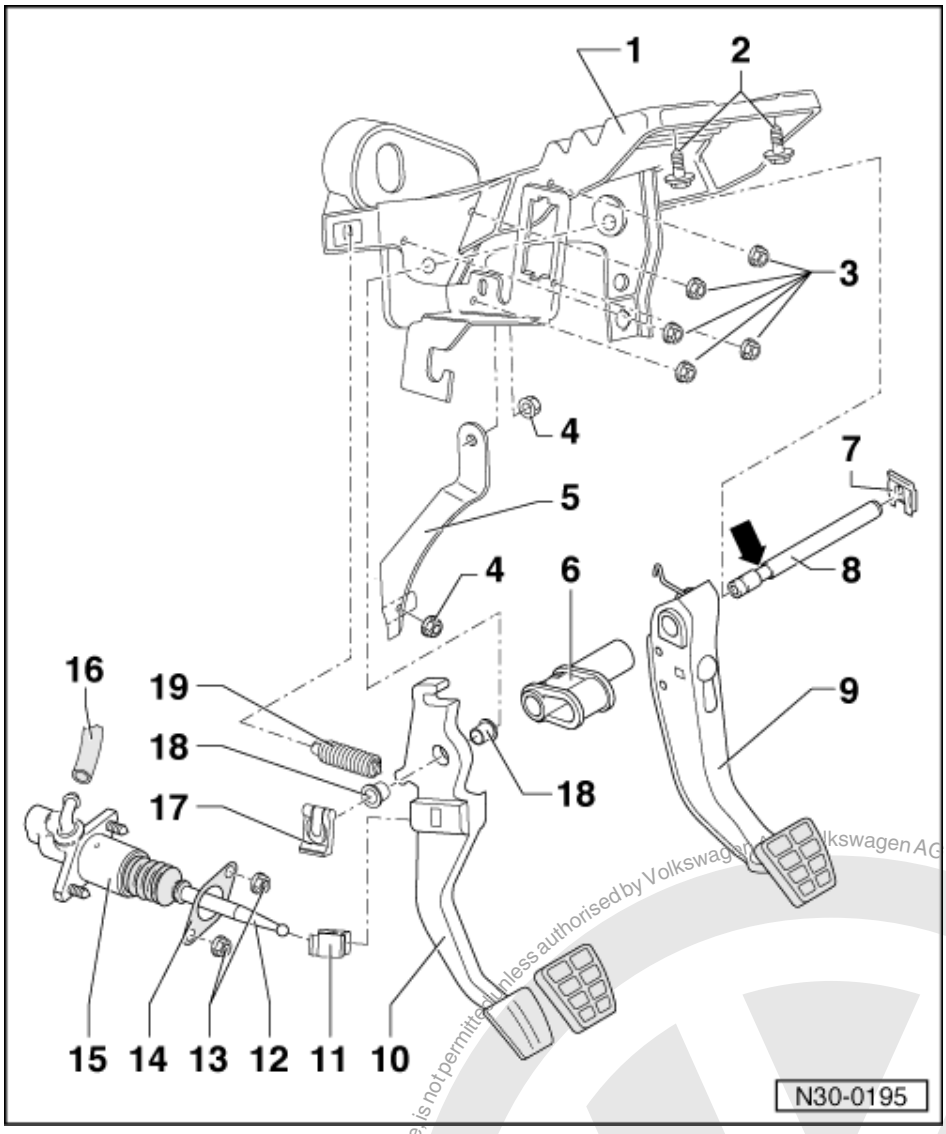

1 Mounting bracket
- Before removal remove steering column with column tube

=> Repair group 48; removing and installing steering column and column tube. removing and installing steering column and column tube.
- Separate brake pedal from master brake cylinder

=> Repair group 47; separating brake pedal from brake servo. separating brake pedal from brake servo.

2 Hexagon bolt, 25 Nm

3 Self-locking hexagon nut, 25 Nm
- Qty. 5
- For mounting bracket to stud/brake servo
- Always renew

4 Self-locking hexagon nut, 25 Nm
- Qty. 2
- Always renew

Protected by copyright. Copyright for private and commercial purposes, in part or in whole is not permitted unless authorised by Volkswagen AG. Volkswagen AG does not guarantee or accept any liability with respect to the correctness of information in this document. Copyright by Volkswagen AG.
satelettronica

5 Support

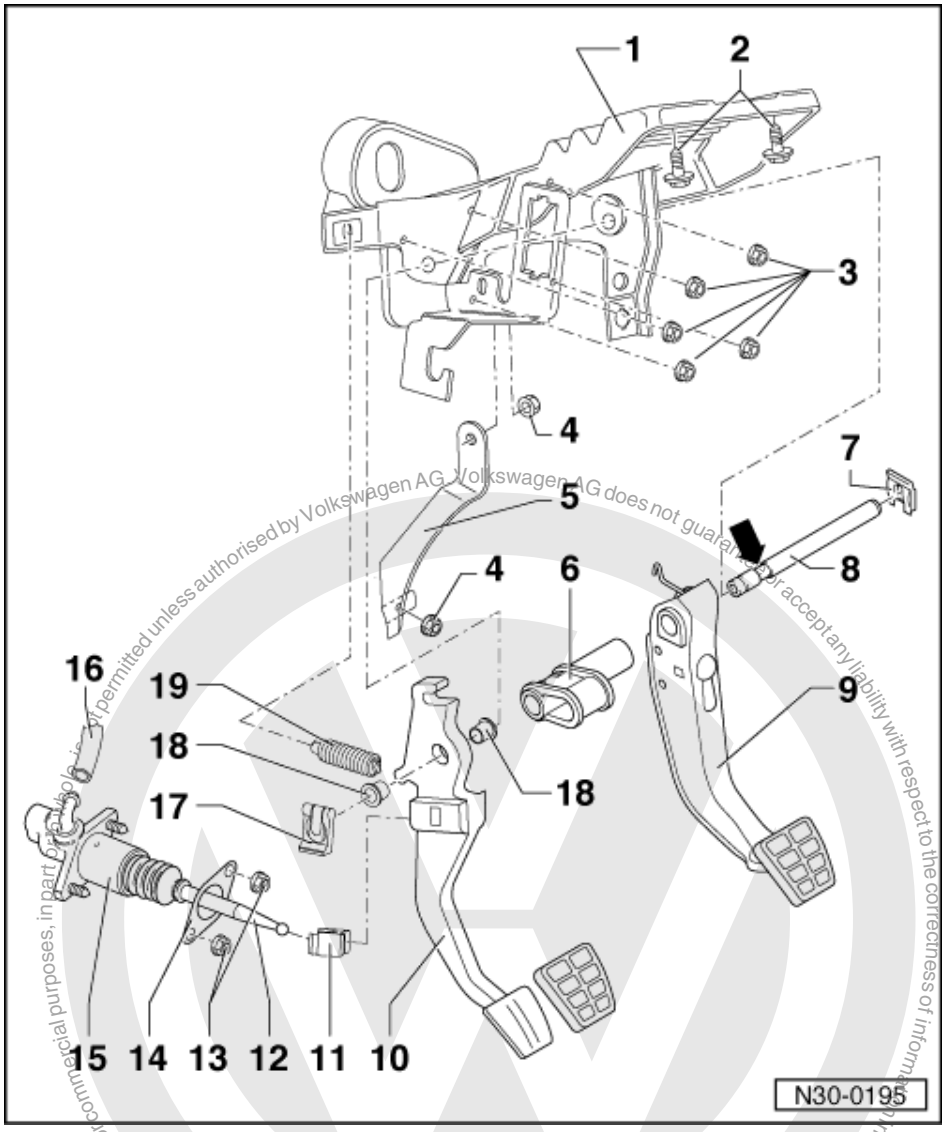

6 Mounting bush
- For mounting the steering column

7 Securing clip
- Removing and installing => Page 13

8 Pivot pin for clutch and brake pedal
- Installation position: The groove (arrow) is located on the clutch pedal side.

9 Brake pedal

10 Clutch pedal
- Removing and installing => Page 13

11 Retainer
- Removing and installing => Page 17

12 Clutch operating rod/master cylinder

Protected by copyright. Copyright by Volkswagen AG.
Copyright by Volkswagen AG. Volkswagen AG does not guarantee or accept any liability with respect to the correctness of information in this document.
Copyright by Volkswagen AG. Reproduction, in part or whole, is not permitted unless authorised by Volkswagen AG for commercial purposes.
satelettronica

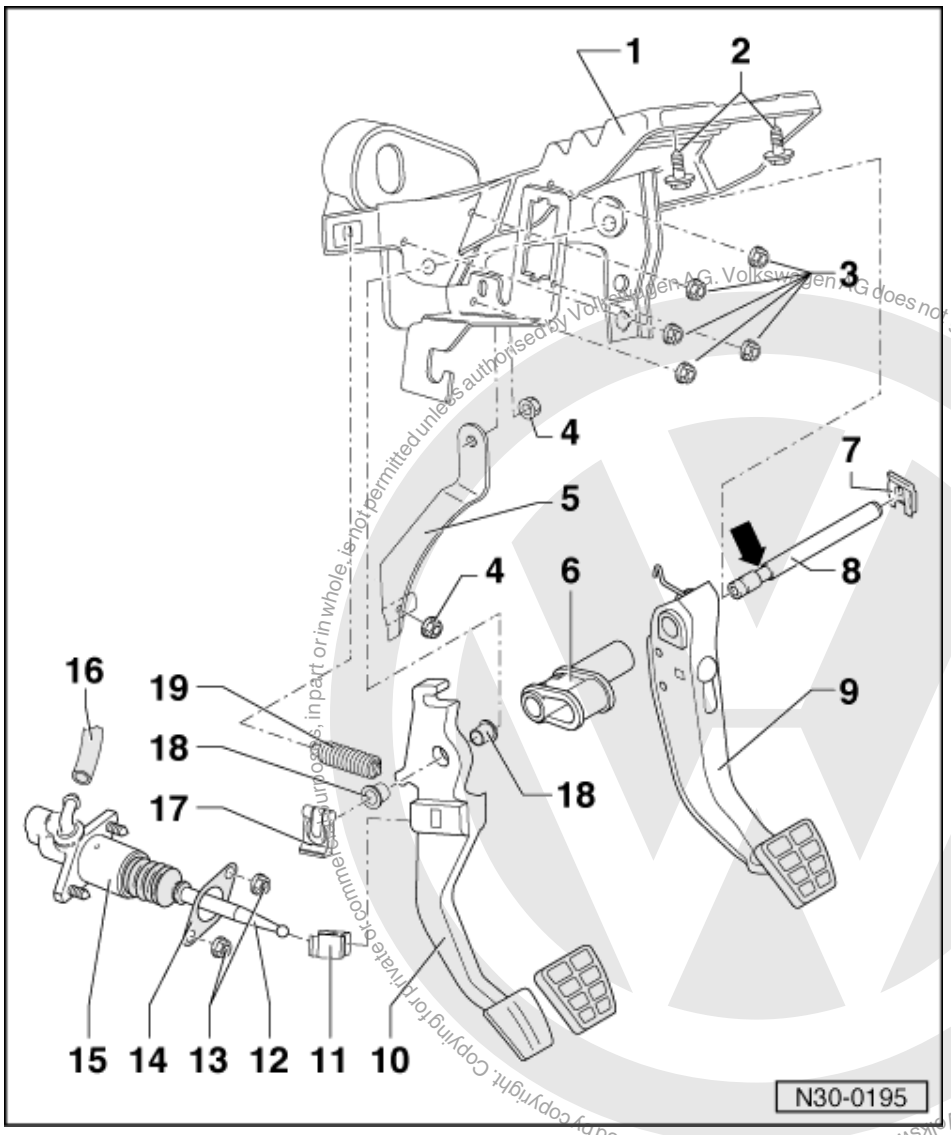

Protected by copyright. Copying for private or commercial purposes, in part or in whole, is not permitted unless authorised by Volkswagen AG. Volkswagen AG does not guarantee or accept any liability with respect to the correctness of information in this document. Copyright by Volkswagen AG.

satelettronica

13 Self-locking hexagon nut, 25 Nm
- Always renew

14 Seal
- Always renew

15 Master cylinder
- Removing and installing
  => Page 17

16 Supply hose

17 Securing clip
- Removing and installing => Page 13

18 Mounting bush
- Check for wear, renew if necessary
- Knock out with drift
- Press in by clamping in vice, use vice clamps

19 Over-centre spring
- Removing and installing
  =>Page 11

1.3 - Removing and installing over-centre spring

Special tools, testers and auxiliary items

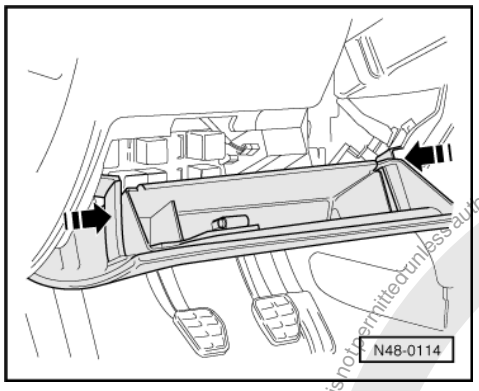

- Installation clamp 3317

Removing

- Disconnect earth strap from battery

Note:

Note radio coding for vehicles with coded radio.

- -> Pull stowage compartment, below dash panel, out of mountings but first push stops in direction of arrow.

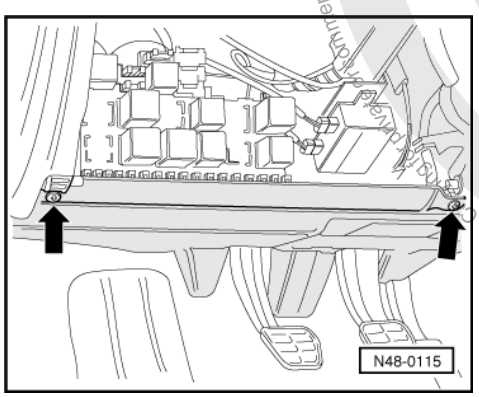

- -> Unbolt cover (arrows)
- Unhook relay plate from mountings;

Note:

Do not pull connectors off relays and wiring.

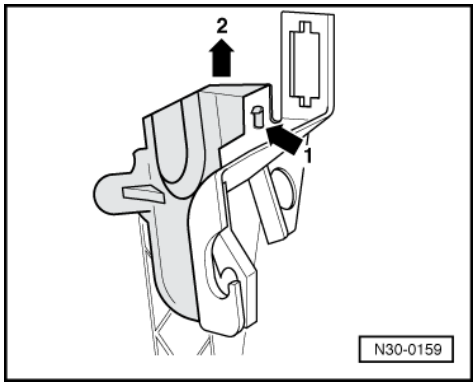

Protected by copyright. Copyright by Volkswagen AG. Volkswagen AG does not guarantee or accept any liability with respect to the correctness of information in this document. Copyright by Volkswagen AG. Commercial use or distribution for commercial purposes, in part or in whole, is not permitted unless authorised by Volkswagen AG.
satelettronica

- Unhook electric wiring from mountings
- -> Remove cover for clutch pedal from mounting bracket (arrows -1- and -2-).

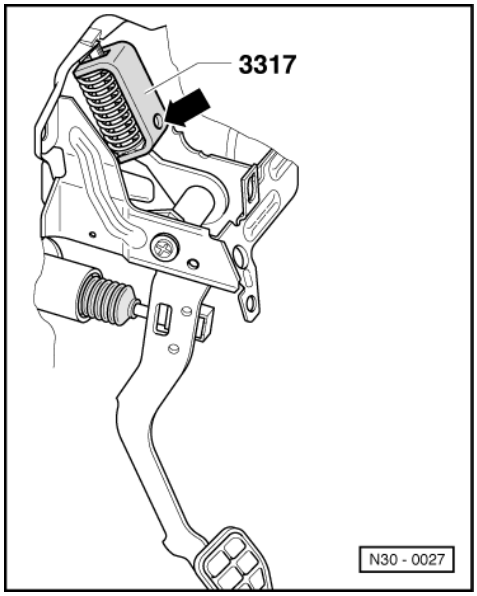

- -> Depress clutch pedal slightly (over-centre spring tensioned to maximum) and press on installation clamp 3317 from top right.

Note:

The drilling faces towards clutch pedal.

- Depress clutch pedal and take out over-centre spring together with retaining clamp 3317 downwards to left.

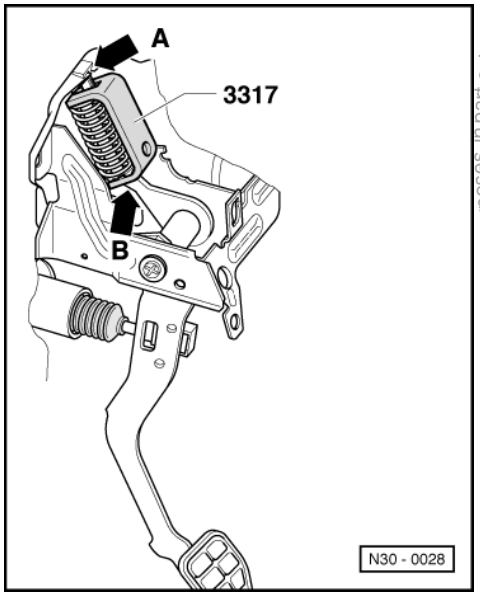

Installing

- Operate clutch pedal.
- -> First insert over-centre spring into rear mounting (arrow A), then press front upwards until the retaining clamp seats on the mounting lug of the clutch pedal (arrow B).
- Take out retaining clamp whilst bringing clutch pedal to rest position.

Protected by copyright. Copying for private or commercial purposes, in part or in whole, is not permitted unless authorised by Volkswagen AG. Volkswagen AG does not guarantee or accept any liability with respect to the correctness of information in this document. Copyright by Volkswagen AG.
satelettronica

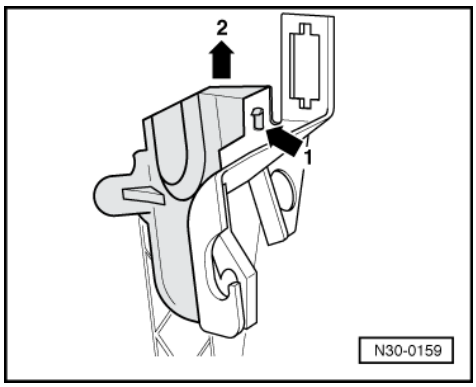

- -> Locate cover on mounting bracket (arrows -1- and -2-).
- Insert relay plate into mounting; check wiring and relay connectors and press fully home if necessary.
- Install cover and stowage compartment below dash panel.

1.4 - Removing and installing clutch pedal

Removing

- Disconnect earth strap from battery

Note:

Note radio coding for vehicles with coded radio.

- Remove stowage compartment and cover; unhook relay plate from mountings => from Page 11 .
- Separate clutch pedal from master cylinder => Page 17 and push operating rod towards engine compartment onto stop.
- Removing over-centre spring => Page 11 .

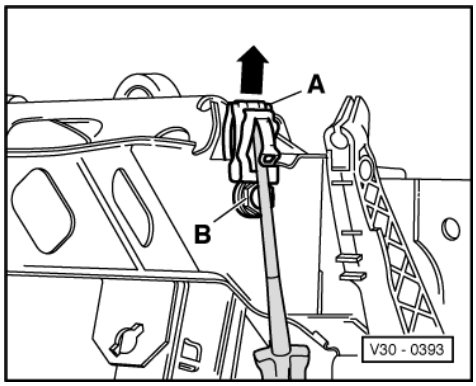

- Remove clutch pedal securing clip from pivot pin, by levering tab up with a screwdriver and pushing clip off.
- -> Take brake pedal side pivot pin securing clip off towards switch panel (direction of arrow) by locating a screwdriver under the retaining clip -A-.
- Pull clutch and brake pedal pivot pin out to the right, until the clutch pedal can be removed.

Installing

Installation is carried out in the reverse sequence, when doing this note the following:

- Align clutch pedal/brake pedal pivot pin so that the flats -B- are vertical before fitting the brake pedal side securing clip => Illustration V30-0393.
- Fit clutch pedal onto pivot pin.
- Fit securing clips onto brake pedal end of pivot pin and onto clutch pedal end.
- Removing over-centre spring => Page 11 .
- Engage clutch pedal with master cylinder operating rod.
- Fill brake fluid reservoir up to "max" marking with brake fluid.

Protected by copyright. Copying for private or commercial purposes, in part or whole, is not permitted unless authorised by Volkswagen AG. Volkswagen AG does not guarantee or accept any liability with respect to the correctness of information in this document. Copyright by Volkswagen AG.
satelettronica

- Bleeding clutch system when fluid level is below "min" marking =>Page 18 .

1.5 - Assembly overview - Hydraulic system

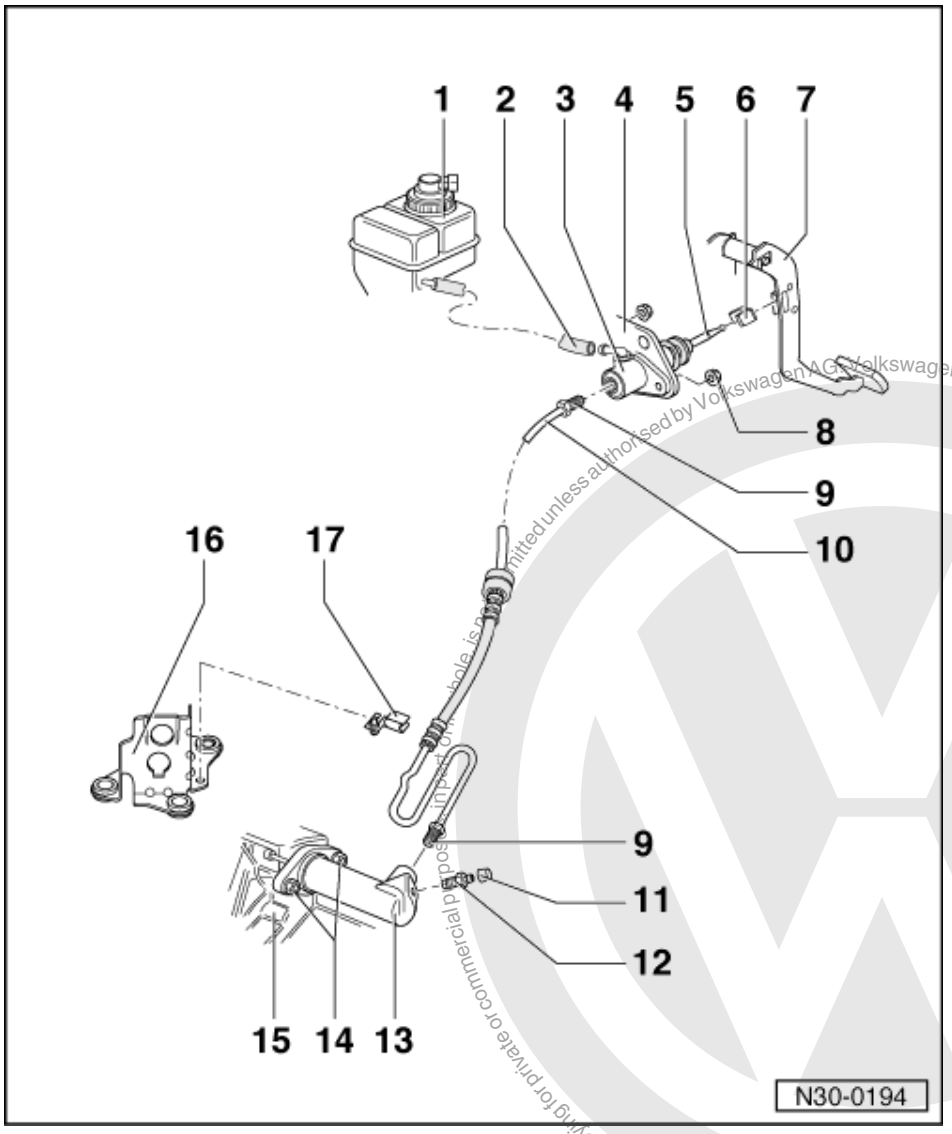

1 Brake fluid reservoir
2 Supply hose
3 Master cylinder
- Removing and installing => Page 17

4 Master cylinder
- Mounting bracket

5 Master cylinder rod
6 Retainer
- Replace only with master cylinder removed
- Removing =>Fig. 1
- Pressing on =>Fig. 2

7 Clutch pedal
- Removing and installing => Page 13

Protected by copyright. Copying for private or commercial purposes, in part or in whole, is not permitted unless authorised by Volkswagen AG. Volkswagen AG does not guarantee or accept any liability with respect to the correctness of information in this document. Copyright by Volkswagen AG.
satelettronica

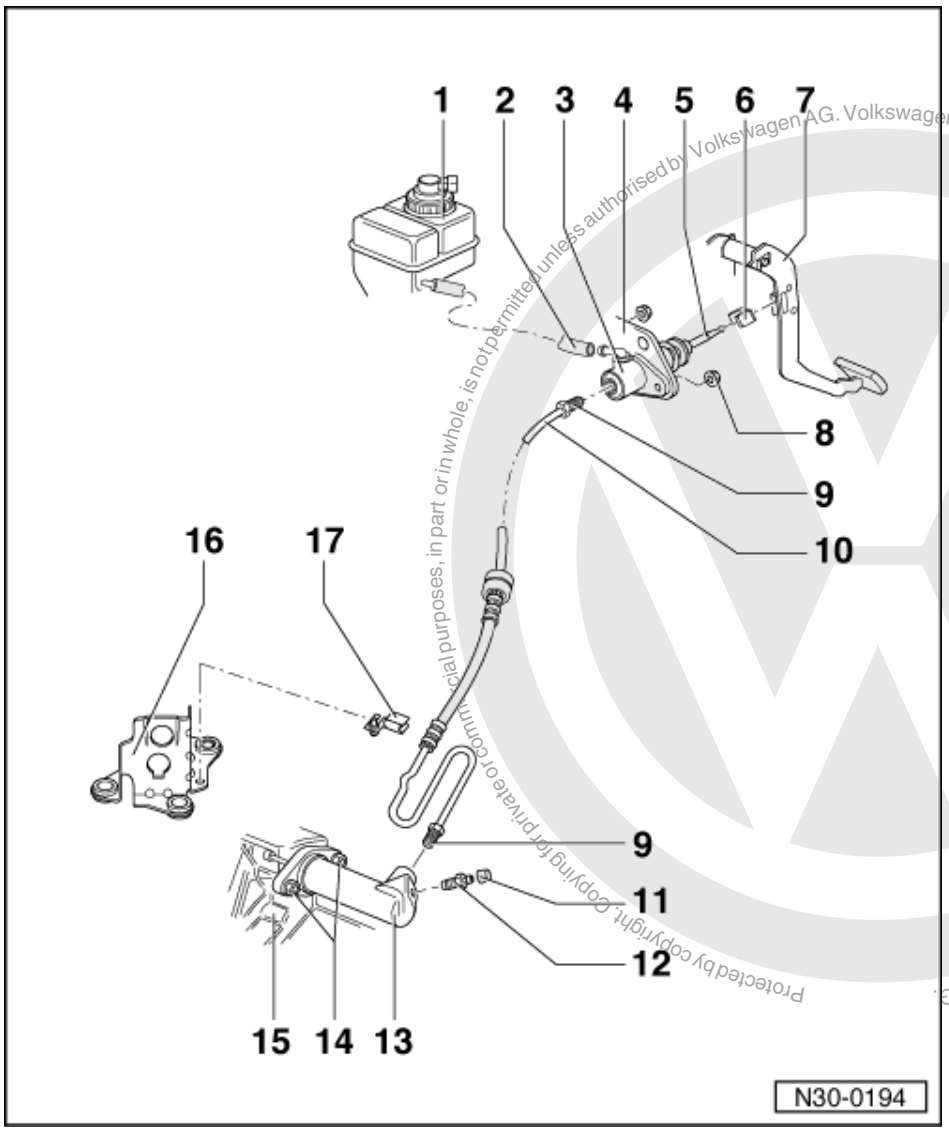

Protected by copyright. Copying for private or commercial purposes, in part or in whole, is not permitted unless authorised by Volkswagen AG. Volkswagen AG does not guarantee or accept any liability with respect to the correctness of information in this document. Copyright by Volkswagen AG.

satelettronica

8 Self-locking hexagon nut, 25 Nm
- Always renew

9 Pipe union, 20 Nm

10 Hose assembly

11 Dust cap

12 Bleed valve
- Bleeding clutch system
  => Page 18

13 Slave cylinder
- Remove the following components before removing slave cylinder:
  - Gear selector cable from gear selector lever =>Page 29
  - Relay lever and actuating arm for gate selector cable => Page 32
- After installing adjust gear selector mechanism =>Page 43

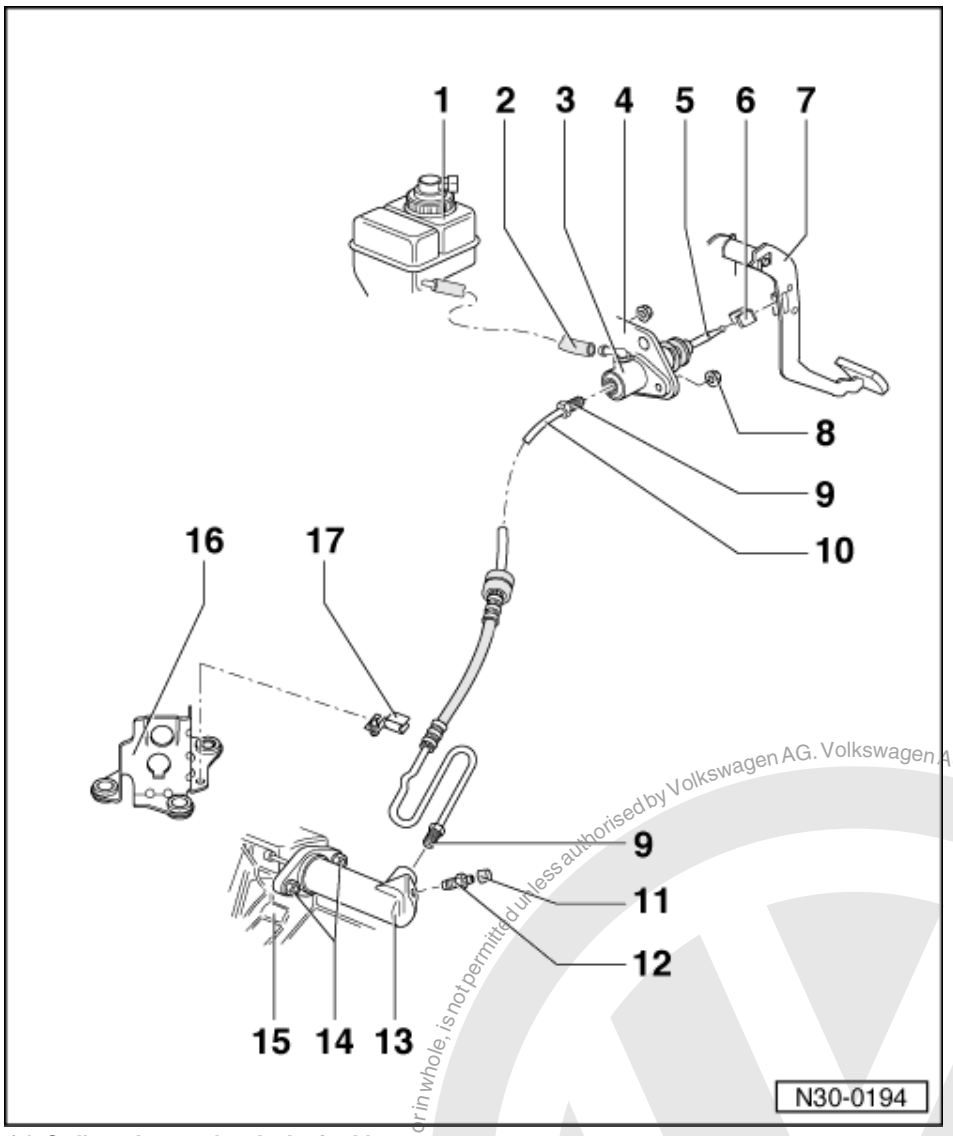

14 Collared securing bolt, 25 Nm
15 Gearbox
16 Support bracket
17 Hose bracket

- Secure to control cable/gear selector cable support bracket

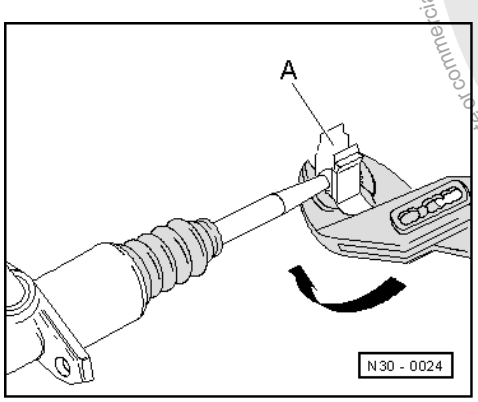

satelettronica
Protected by copyright. Copying for private or commercial purposes, in part or in whole, is not permitted unless authorised by Volkswagen AG. Volkswagen AG does not guarantee or accept any liability with respect to the correctness of information in this document. Copyright by Volkswagen AG.

-> Fig.1 Lever retainer -A- off in direction of arrow

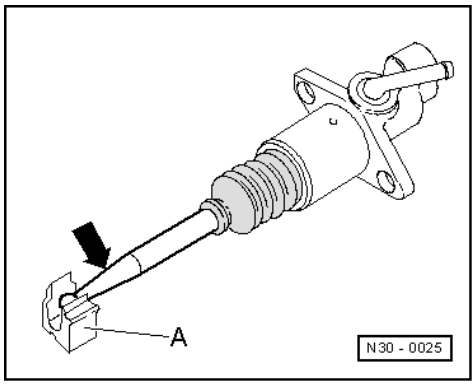

-> Fig.2 Press master cylinder operating rod in retainer -A- in direction of arrow

1.6 - Removing and installing master cylinder

Removing

- Remove coolant expansion tank and lay to one side.

Note:
Do not open cooling system.

- Pull supply hose off brake fluid reservoir and seal.

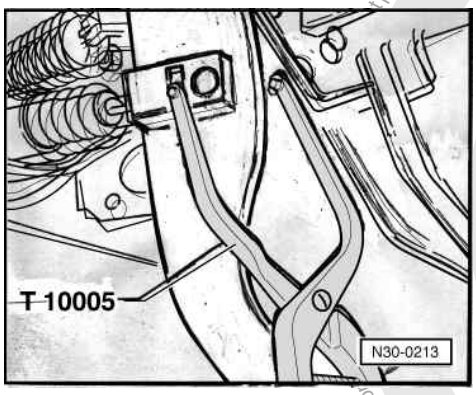

- Remove pipe from master cylinder and seal.

-> Separate master cylinder operating rod from clutch pedal.

- Unbolt master cylinder from passenger compartment.

Installing

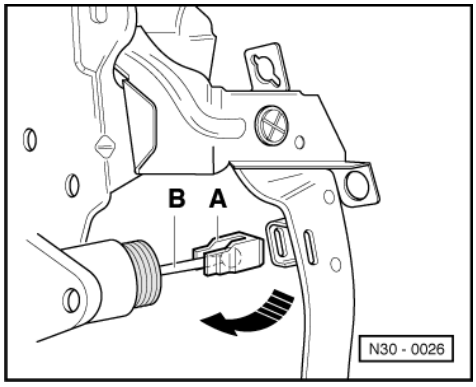

Protected by copyright. Copying or publication is not permitted unless authorised by Volkswagen AG. Volkswagen AG does not guarantee or accept any liability with respect to the correctness of information in this document. Copyright by Volkswagen AG.
satelettronica

Protected by copyright. Copying for private or commercial purposes, in part or in whole, is not permitted unless authorised by Volkswagen AG. Volkswagen AG does not guarantee or accept any liability with respect to the correctness of information in this document. Copyright by Volkswagen AG.

Installation is carried out in the reverse sequence, when doing this note the following:

- -> The retainer -A- must be fitted to the master cylinder operating rod -B-.
- To engage press clutch pedal towards bulkhead (direction of arrow). Ensure correctly located.
- Bleeding clutch system after installing master cylinder=>Page 18 .

1.7 - Bleeding clutch system

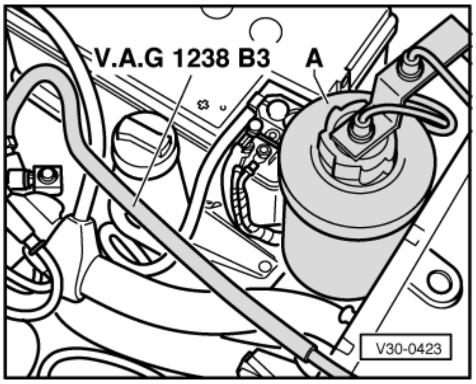

- Bleed clutch system using the brake filling and bleeding appliance V.A.G.1238 B.
- To bleed system use bleed hose V.A.G 1238/B - 670 mm long.
- -> Connect bleed hose to brake bleeding appliance collector bottle -A-pressure hose.

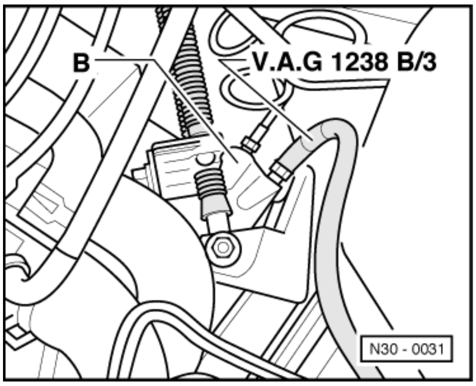

- -> Connect bleed hose to slave cylinder -B- and open bleed valve.
- Depress clutch pedal several times after completion of bleeding process.

satelettronica

2 - Servicing clutch release mechanism

2.1 - Servicing clutch release mechanism

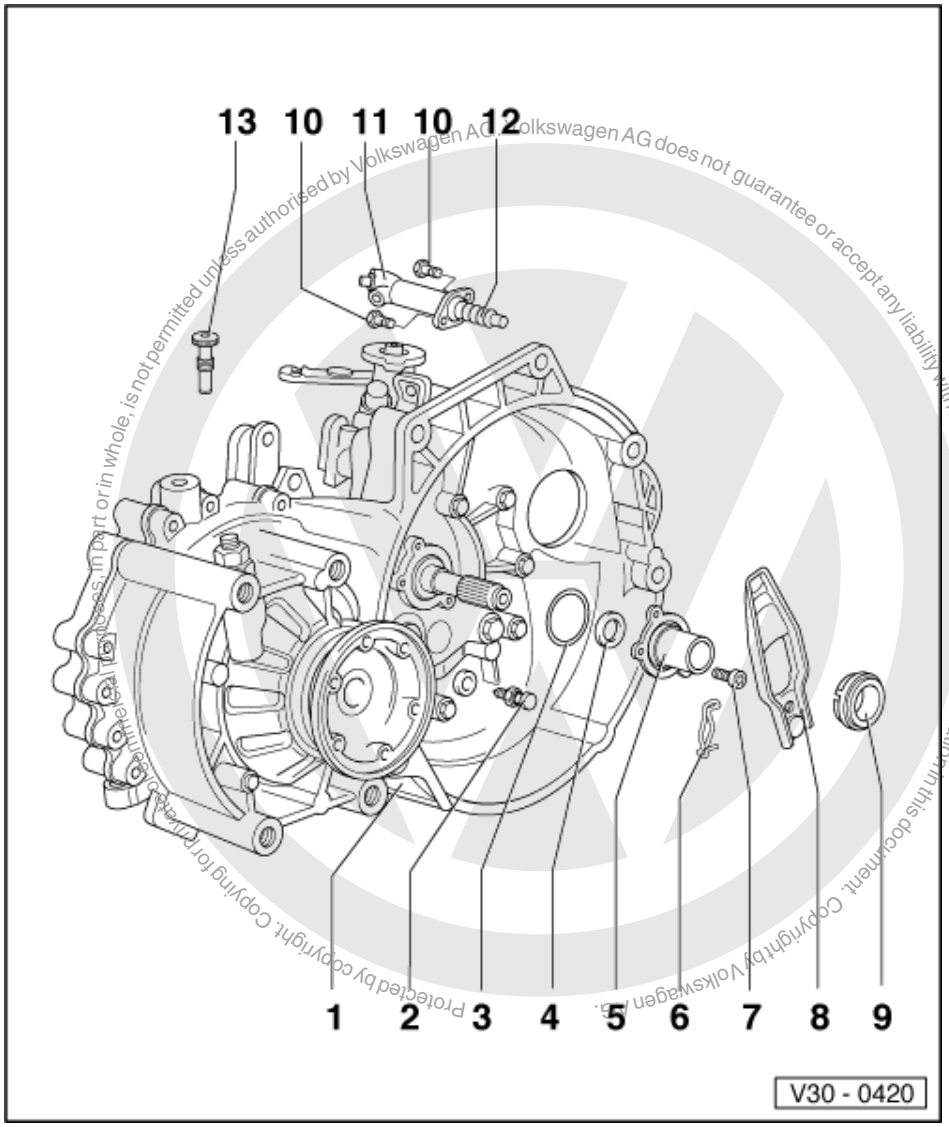

1 Gearbox
2 Ball stud, 25 Nm
- Lubricate with MoS2 grease

3 O-ring
- Always renew

4 Input shaft oil seal
- Renewing => Page 90

5 Guide sleeve
- Lubricate in area of release bearing with MoS2 grease

6 Retaining spring
- Secure to clutch release lever

satelettronica

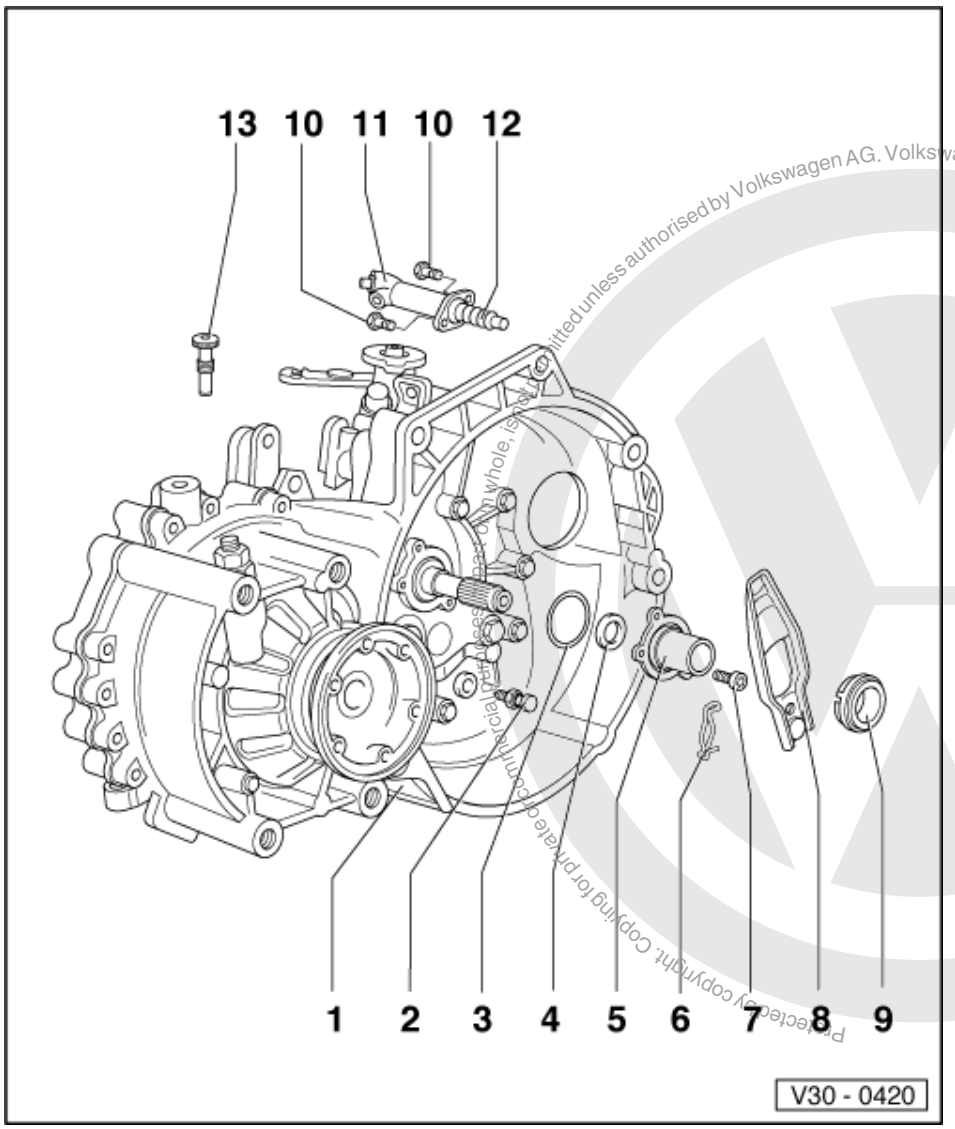

7 Securing bolt, 20 Nm
8 Clutch release lever
9 Release bearing
- Do not wash-out bearing, only wipe
- Renew noisy bearings
- Lubricate surfaces which contact release lever with MoS2 grease

10 Securing bolt, 20 Nm
11 Slave cylinder
- Removing and installing
  => Page 15

12 Plunger
- Grease end of plunger with MoS2 grease

satelettronica

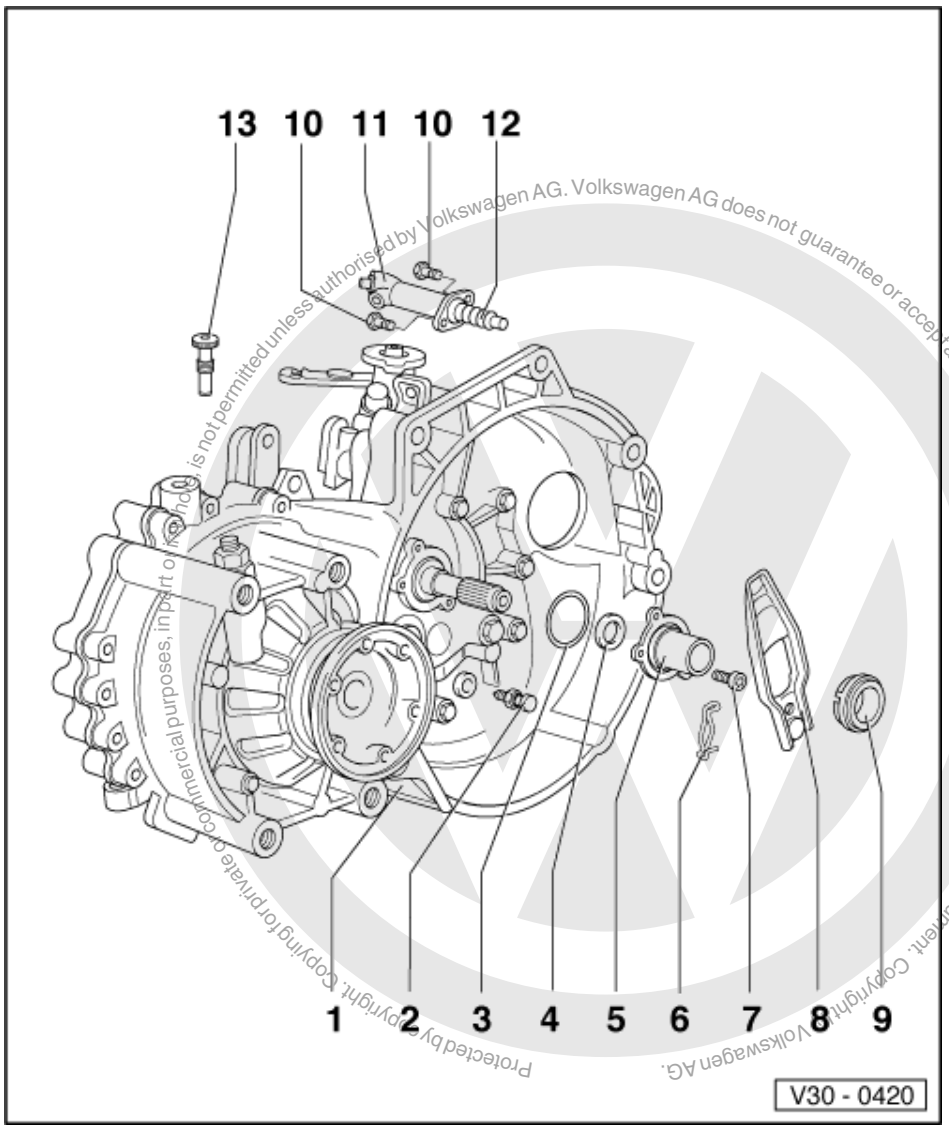

Protected by copyright. Copying for private or commercial purposes, in part or in whole, is not permitted unless authorised by Volkswagen AG. Volkswagen AG does not guarantee or accept any liability with respect to the correctness of information in this document. Copyright by Volkswagen AG.

13 Assembly bolt

- Secures the clutch release lever when installing gearbox
- Unscrew after gearbox has been installed

Note:

If the assembly bolt (Item 13) is not available, an M 8 x 35 bolt can be used.

satelettronica

3 - Servicing clutch

3.1 - Servicing clutch

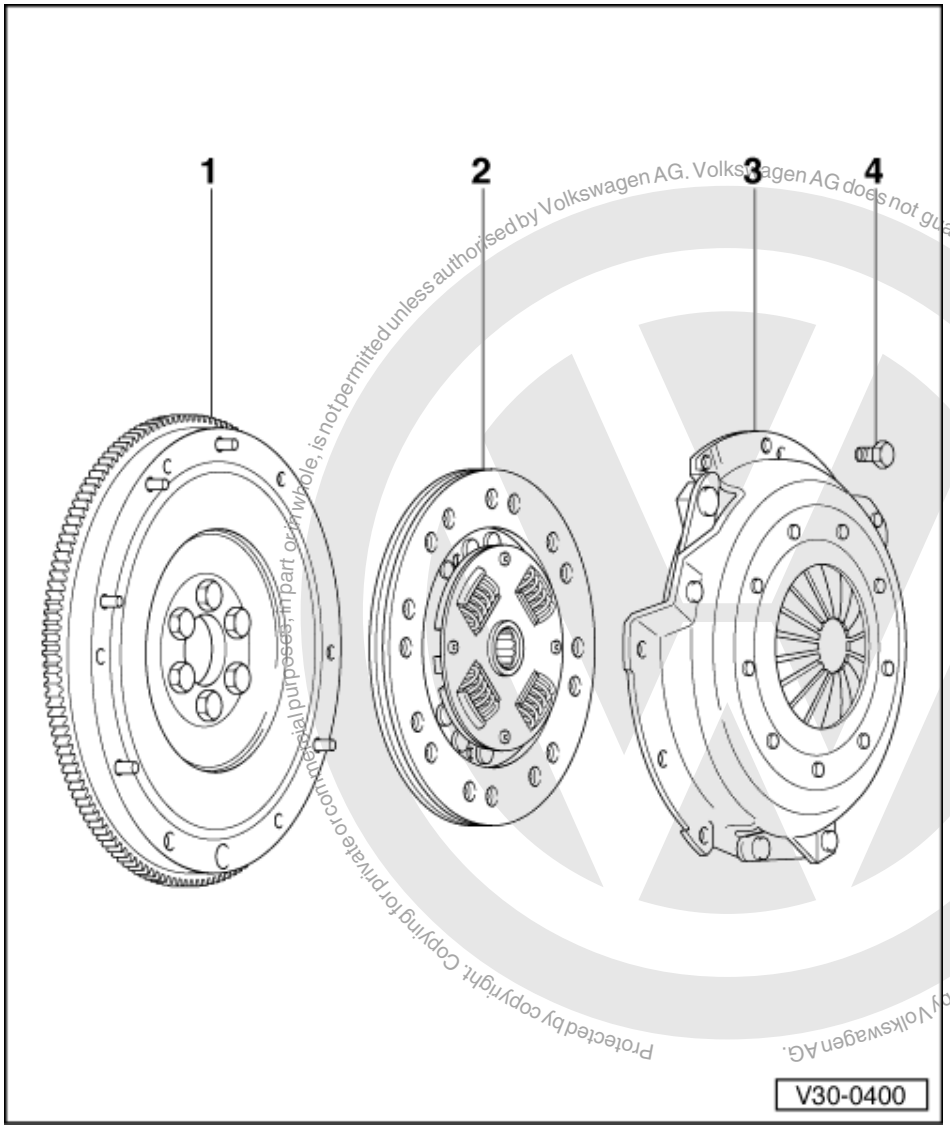

Protected by copyright. Copying for private or commercial purposes, in part or in whole, is not permitted unless authorised by Volkswagen AG. Volkswagen AG does not guarantee or accept any liability with respect to the correctness of information in this document. Copyright by Volkswagen AG.

satelettronica

(Gearbox removed)

Notes:

- Before replacing the clutch and pressure plate note fault finding transmission No.9 - Defects on the clutch and clutch mechanism
- Replace clutch plates and pressure plates with damaged or loose rivets
- Select correct clutch plate and pressure plate according to parts list and engine code.

1 Flywheel
- Ensure centring pins are a tight fit
- Contact surface for clutch lining must be free of grooves, oil and grease
- Removing and installing

=> Repair group13

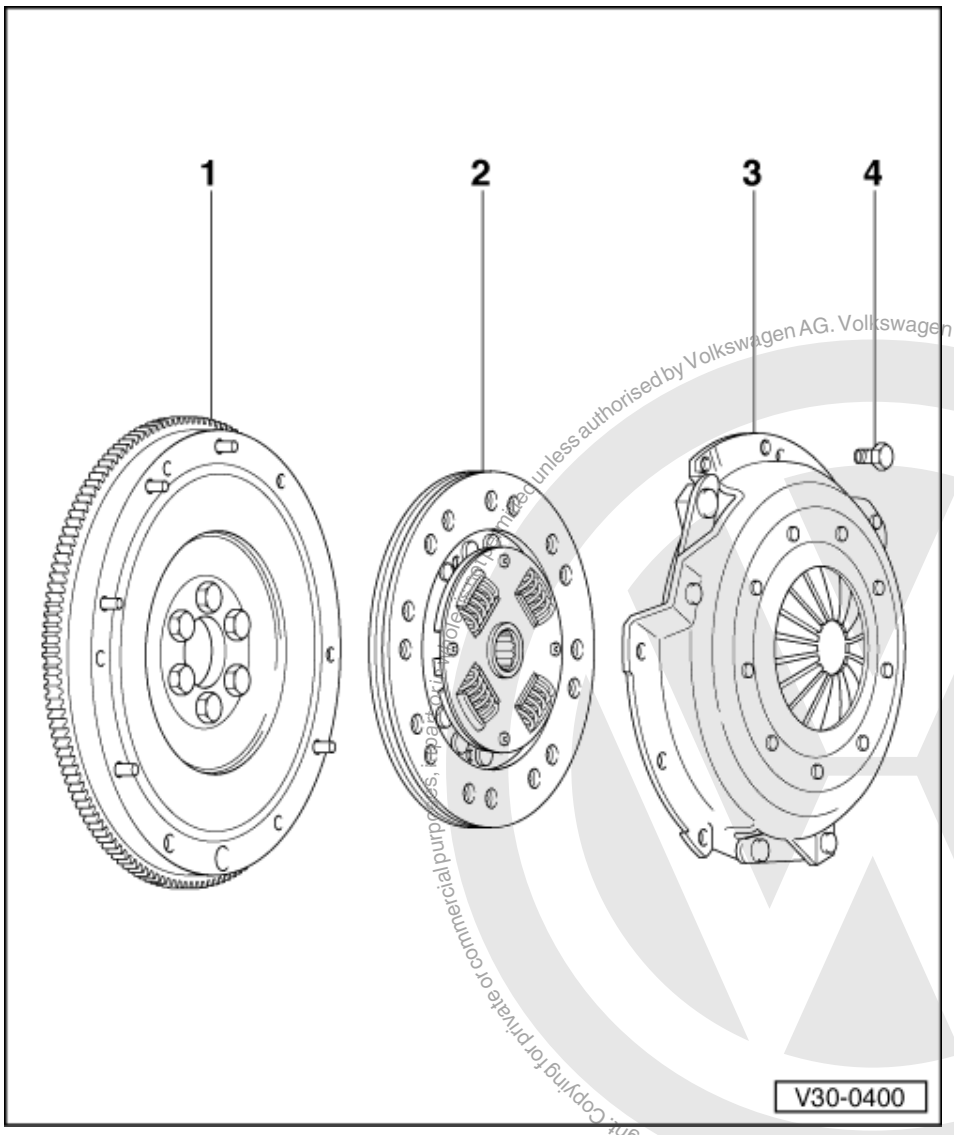

2 Clutch plate

- Diameter
  =>Page 2
- Note installation position, spring cage faces to pressure plate
- Centring => Fig. 1
- Lightly grease splines

Note:

Clean input shaft splines and on used clutch plates, the hub splines, remove corrosion and apply only a very thin coating of grease Part No: G 000 100 to the input shaft splines. Then move clutch plate to and fro on input shaft until hub moves freely on shaft. Excess grease must be removed.

Protected by copyright. Copying for private or commercial purposes, partially or completely, is not permitted unless authorised by Volkswagen AG. Volkswagen AG does not guarantee or accept any liability with respect to the correctness of information in this document. Copyright by Volkswagen AG.
satelettronica

This material is protected by copyright. Copyright by Volkswagen AG. Volkswagen AG does not guarantee or accept any liability with respect to the correctness of information in this document. Copyright by Volkswagen AG. Reproduction in whole or in part is not permitted unless authorised by Volkswagen AG for commercial purposes, in part or in whole, is not permitted unless authorised by Volkswagen AG

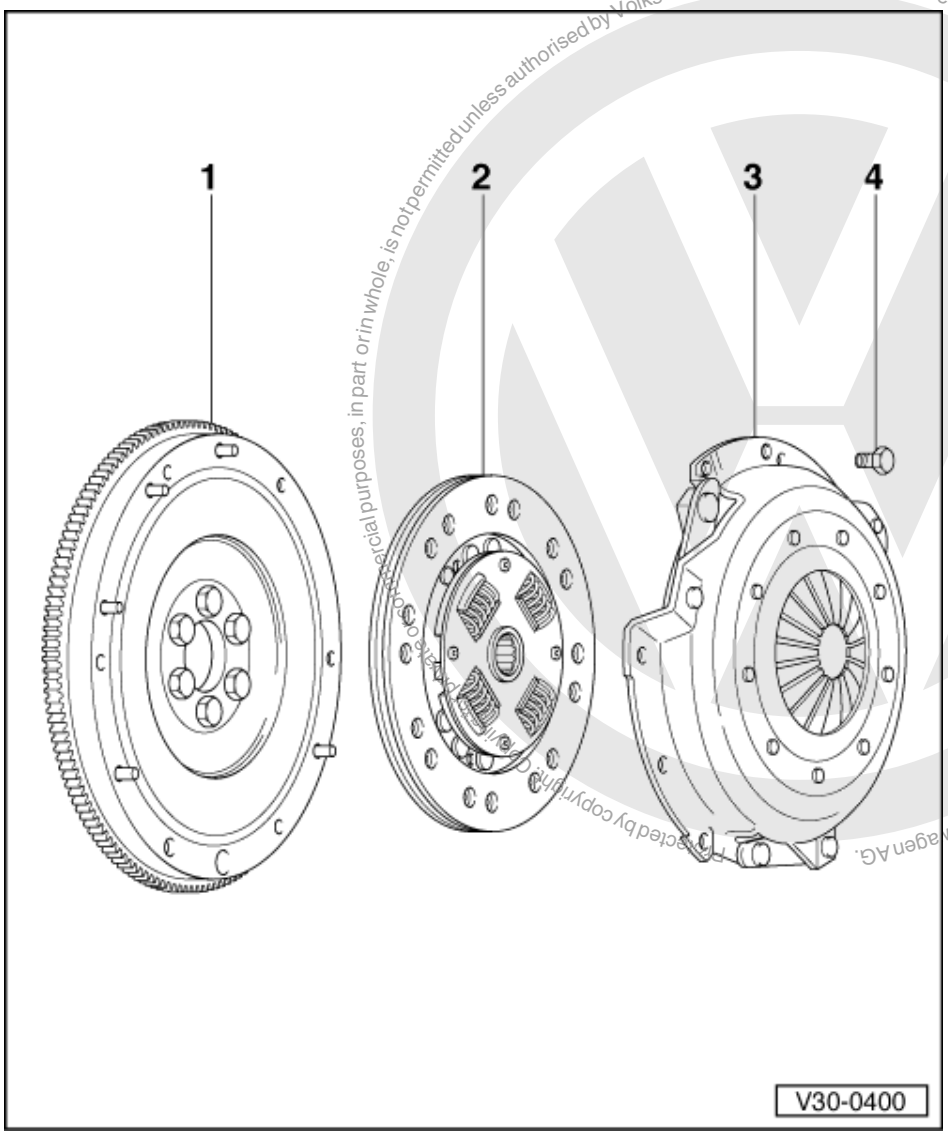

3 Pressure plate

- Removing and installing => Fig. 1
- Check ends of diaphragm spring
  => Fig. 2

Note:

Pressure plates are protected against corrosion and greased. Only the contact surface may be cleaned, otherwise the service life of the clutch will be considerably reduced.

4 Twelve point bolt, 20 Nm

- Loosen and tighten gradually and diagonally

satelettronica

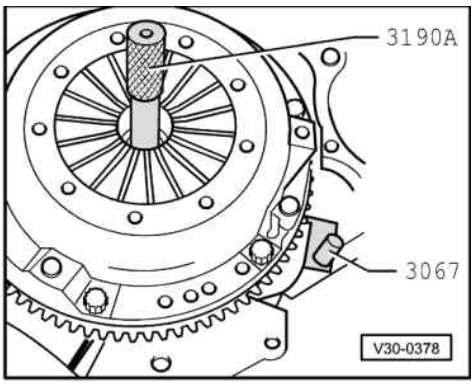

-> Fig.1 Centring clutch plate and removing and installing pressure plate

- Loosen and tighten bolts gradually and diagonally.
- Reverse position of retainer 3067 when removing.

Warning!
The clutch plate lining must make full contact with the flywheel and the pressure plate contact surface must make full contact with the clutch plate lining (pressure plate housing square to flywheel) before inserting securing bolts. If the pressure plate housing is pulled in at an angle, the centralizing holes in the pressure plate housing and the centralizing pins in the flywheel will be damaged.

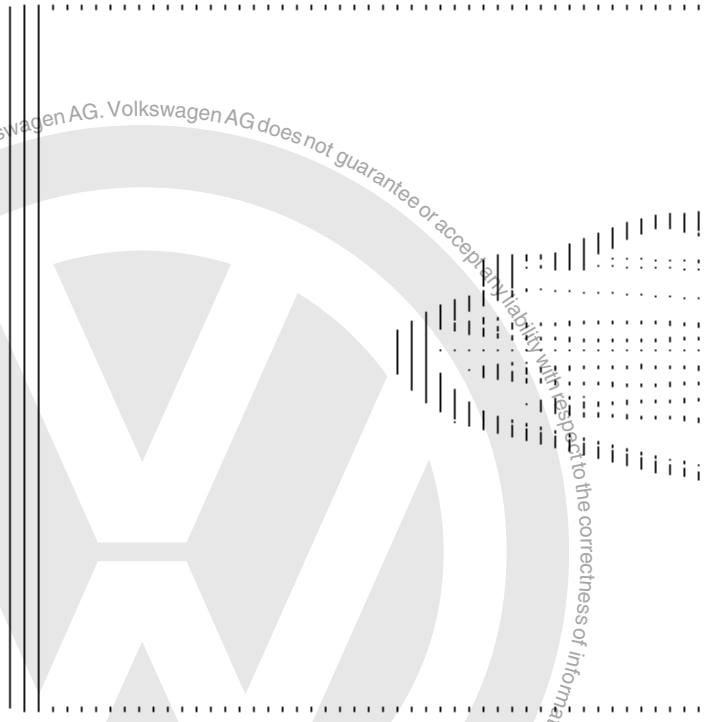

-> Fig.2 Checking ends of the diaphragm spring

- Wear up to half the thickness of the diaphragm spring is permitted.

Protected by copyright. Copyright by Volkswagen AG.
Copyright by Volkswagen AG. Volkswagen AG does not guarantee or accept any liability with respect to the correctness of information in this document.
Protected by copyright. Copying for private or commercial purposes, in part or in whole, is not permitted unless authorised by Volkswagen AG.
satelettronica

34 - Controls, Housing

1 - Servicing gear selector mechanism

1.1 - Servicing gear selector mechanism

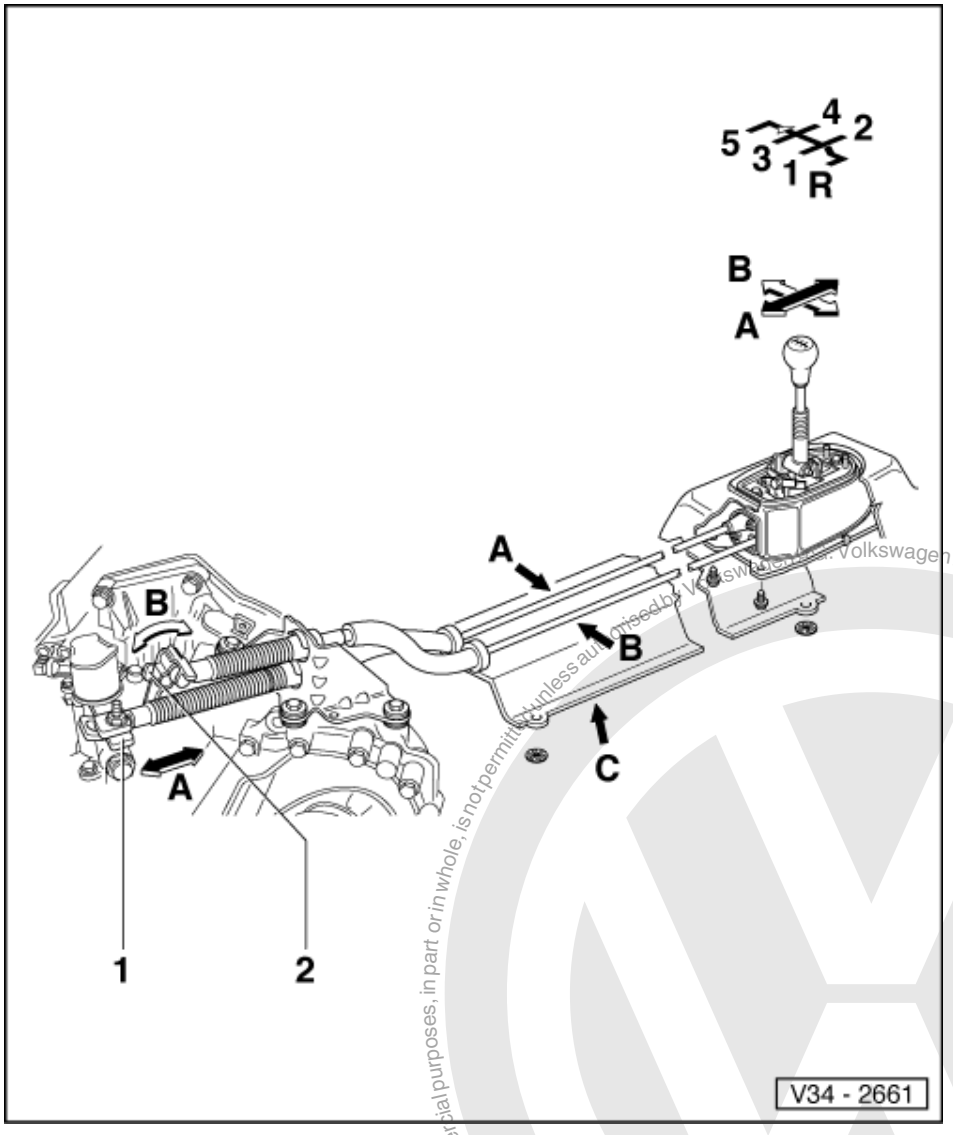

1.2 - Installation position of gear selector mechanism

A - Gear change cable
B - Gate selector cable
C - Heat shield

- Holds selector cables in position
- Remove before removing the gear selector mechanism.

Arrow -A- Gear selection movement

satelettronica
Protected by copyright. Copying for private or commercial purposes, in part or in whole, is not permitted unless authorised by Volkswagen AG. Volkswagen AG does not guarantee or accept any liability with respect to the correctness of information in this document. Copyright by Volkswagen AG.

Arrow -B- Gate selection movement

1 Gear selector lever
2 Relay lever with actuating arm/gate selector cable

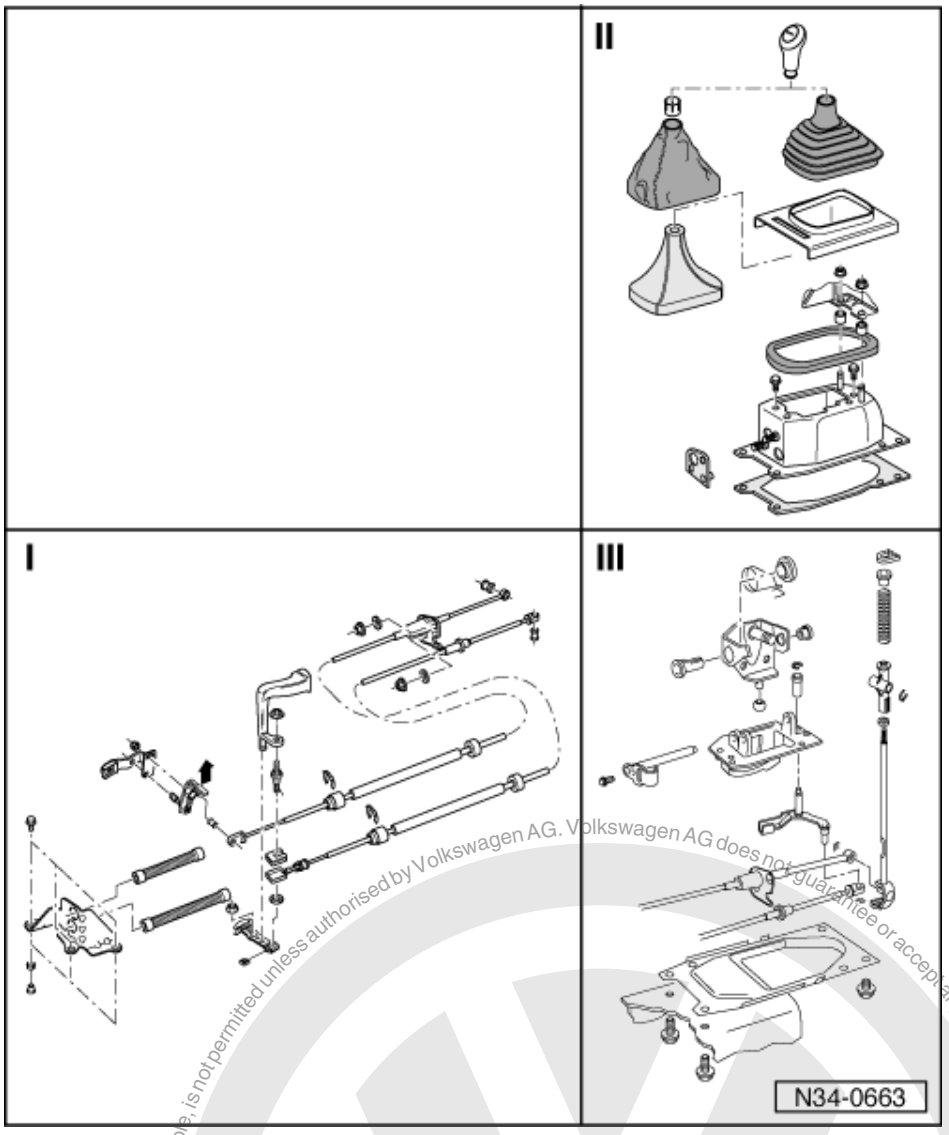

I - Removing and installing gear selector control cables => Page 29
II - Removing and installing gear stick housing => Page 35
III - Removing and installing gear lever => Page 39

- Before removing the gear selector mechanism, remove the following components:

- Catalyst
- Heat shield for selector cables => Page 26

satelettronica
Protected by copyright. Copying for private or commercial purposes, in part or whole, is not permitted unless authorised by Volkswagen AG. Volkswagen AG does not guarantee or accept any liability with respect to the correctness of information in this document. Copyright by Volkswagen AG.

Protected by copyright. Copying for private or commercial purposes, in part or in whole, is not permitted unless authorised by Volkswagen AG. Volkswagen AG does not guarantee or accept any liability with respect to the correctness of information in this document. Copyright by Volkswagen AG.

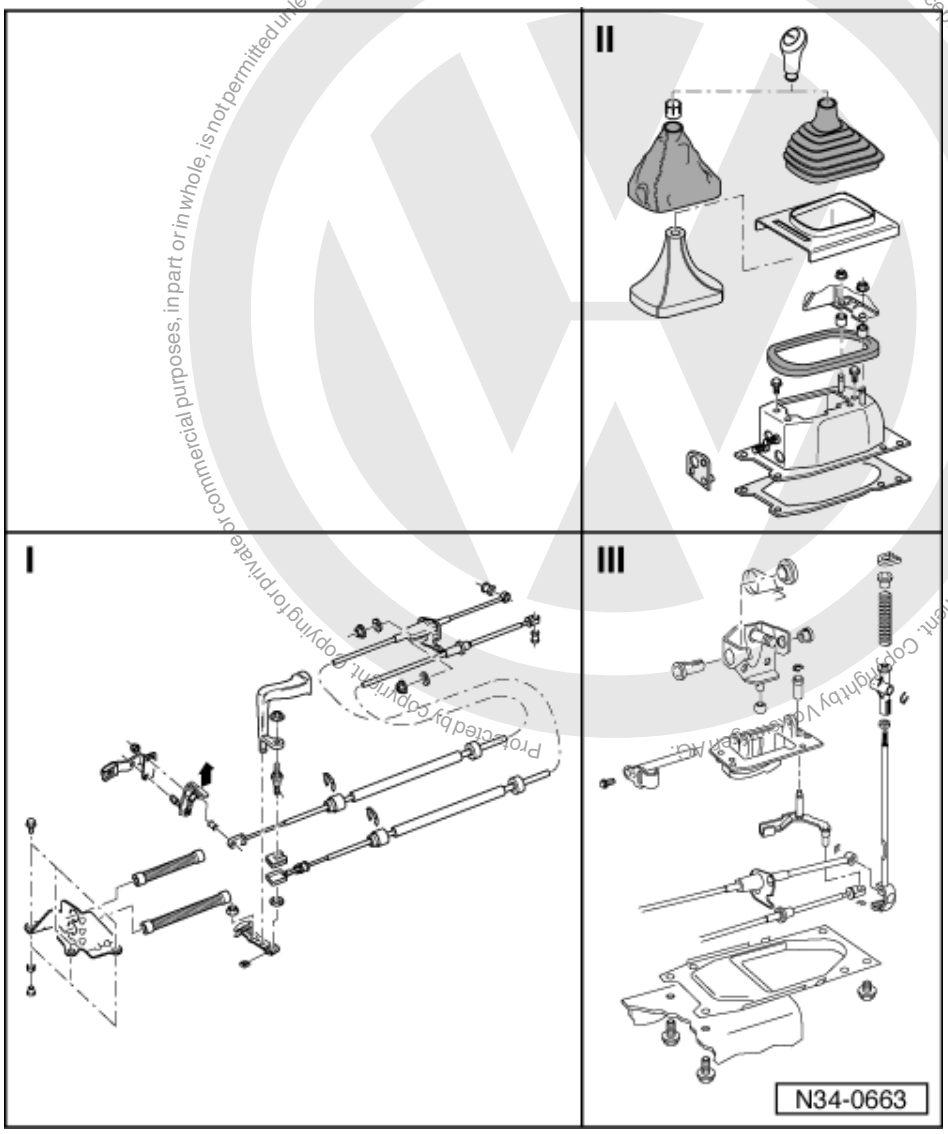

Notes:

- Before working on the selector change mechanism, disconnect earth strap from the battery in the engine compartment.
- Note radio code on vehicles with coded radio.
- To replace the selector cables remove gear selector mechanism complete.
- Do not kink selector cables.
- Adjusting selector cables
  => Page 43

satelettronica

1.3 - Removing and installing gear selector cables

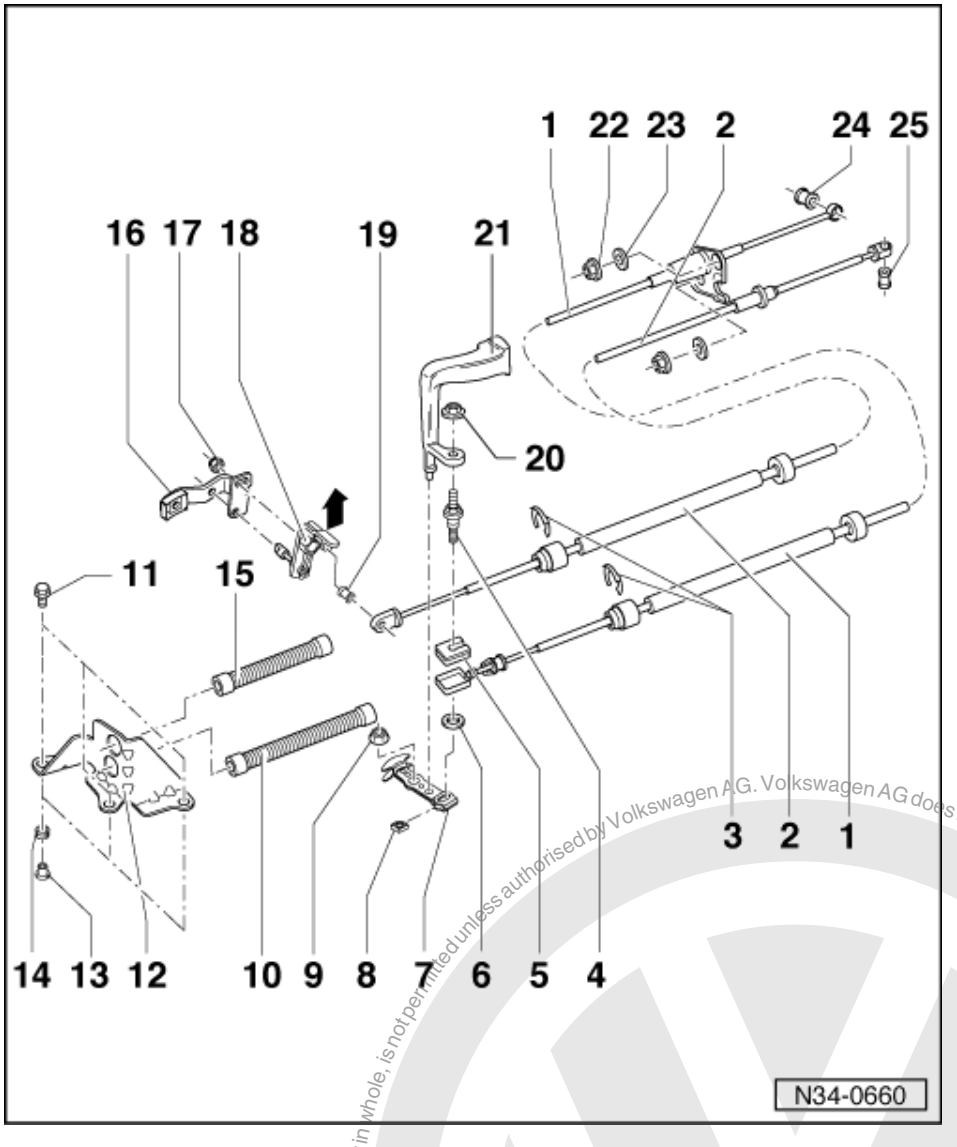

Note:

Lubricate all mountings and sliding surfaces with Polyuric grease Part No. G 052 142 A2.

1 Gear selector cable
- Installation position => Page 26

2 Gate selector cable
- Pull off actuating arm (item 18) by pulling lug in direction of arrow
- Installation position => Page 26
- Install before installing gear selector cable

3 Circlip
- When removing do not damage bellows

Protected by copyright. Copying for private or commercial purposes, in part or in whole, is not permitted unless authorised by Volkswagen AG. Volkswagen AG does not guarantee or accept any liability with respect to the correctness of information in this document. Copyright by Volkswagen AG.
satelettronica

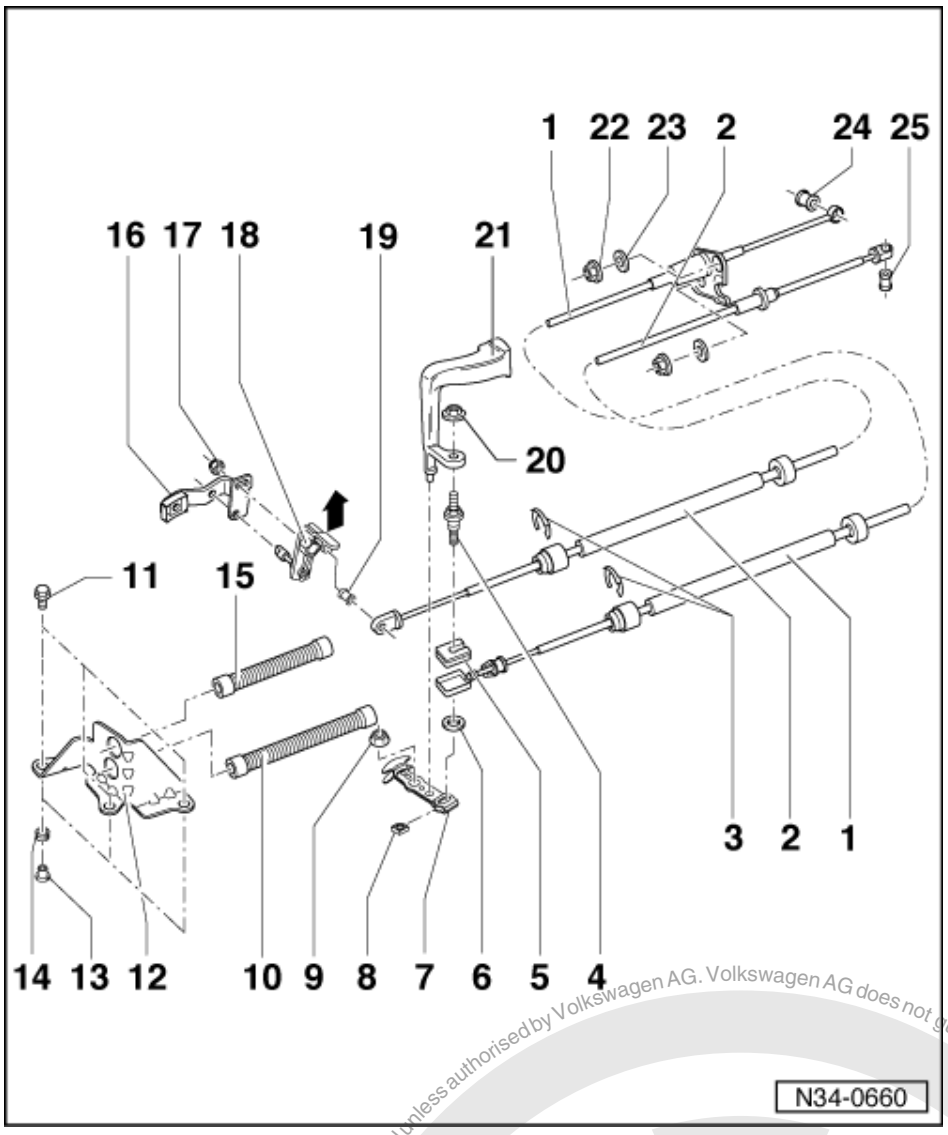

4 Hexagon combi bolt, 25 Nm
- With shoulder
- Gear selector cable to gear change lever

5 Rubber bush
- For gear change cable to gear selector lever
- To renew bellows press out of end piece

6 Washer
- Install between gear selector cable and gear selector lever

7 Gear selector lever
- Only fits in one position
- After installing adjust gear selector mechanism => Page 43
- Installation position => Page 34

Protected by copyright. Copying for private or commercial purposes, in part or in whole, is not permitted unless authorised by Volkswagen AG. Volkswagen AG does not guarantee or accept any liability with respect to the correctness of information in this document. Copyright by Volkswagen AG.
satelettronica

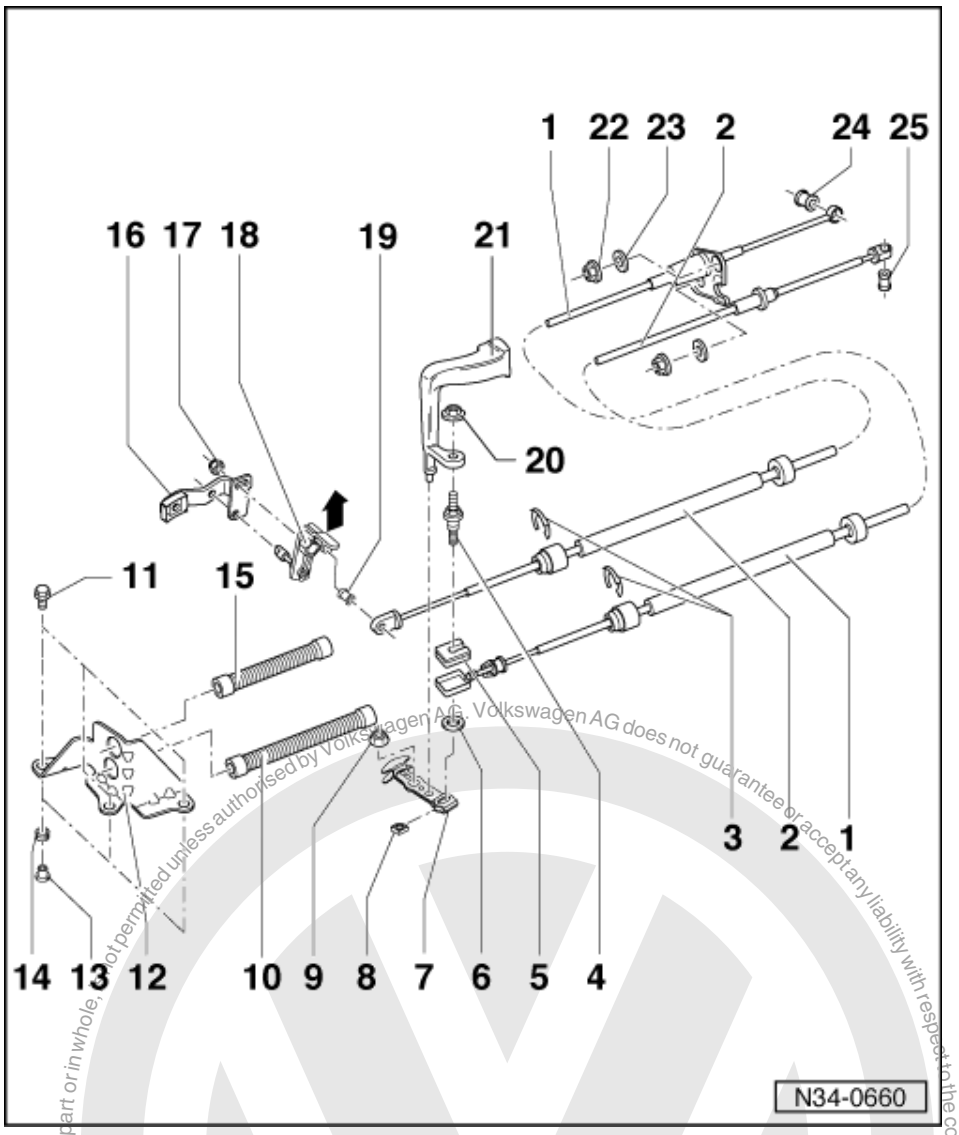

8 Square nut
- Insert into gear selector lever

9 Self-locking hexagon nut, 25 Nm
- For gear selector lever

10 Bellows
- Carefully pull over gear selector cable end piece
- Use MoS2 grease

11 Hexagon bolt, 25 Nm
- For support bracket

12 Support bracket

13 Distance piece

14 Bush
- Support bracket mounting to gearbox

Protected by copyright. Copying for private or commercial purposes, in part or in whole, is not permitted unless authorised by Volkswagen AG. Volkswagen AG does not guarantee or accept any liability with respect to the correctness of information in this document. Copyright by Volkswagen AG.
satelettronica

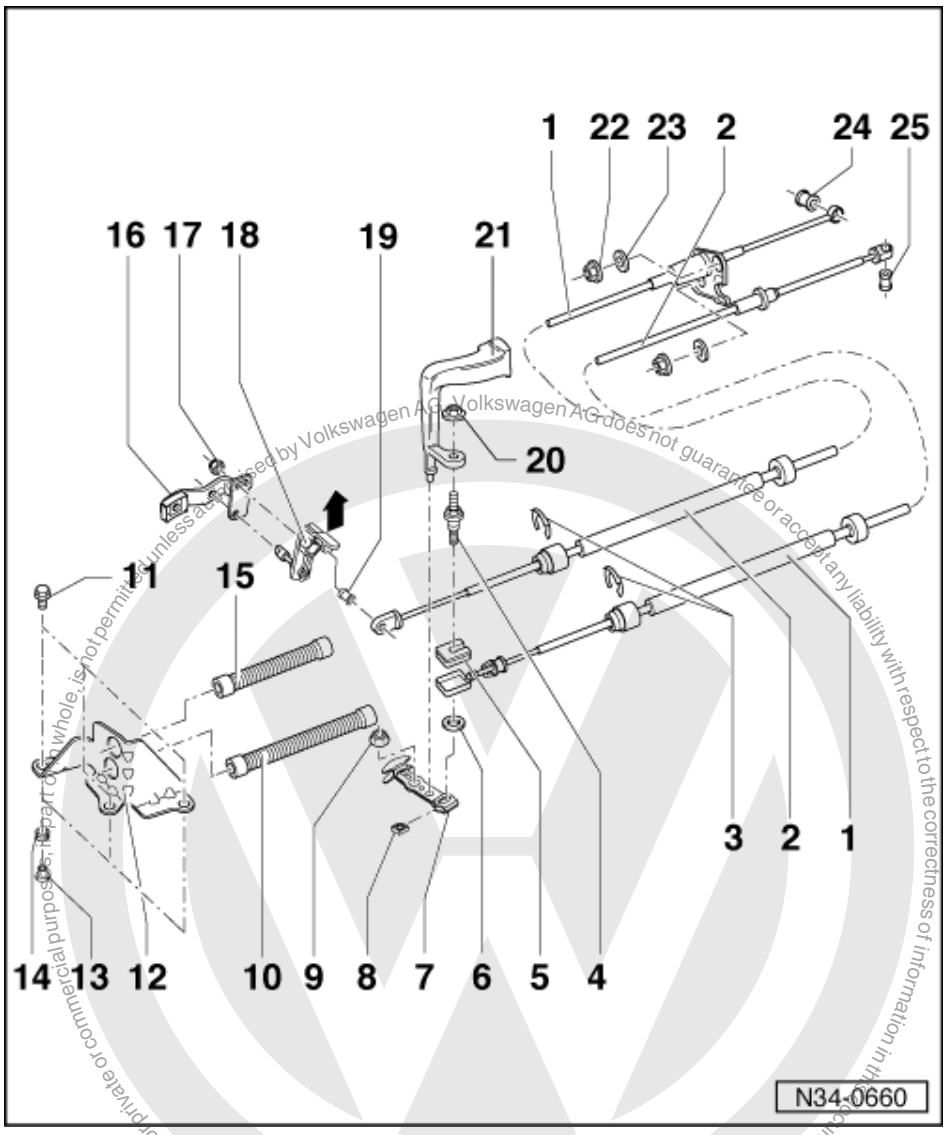

15 Bellows

- Carefully pull over gear selector cable end piece
- Use MoS2 grease

16 Relay lever

- Remove before removing clutch control
- Installation position => Page 34
- Servicing => Page 98

17 Self-locking hexagon nut, 15 Nm

- For relay lever to actuating arm
- Only loosen to adjust selector mechanism

18 Actuating arm

- With pivot pin to mount relay lever
- Installation position => Page 34
- Servicing => Page 98

satelettronica

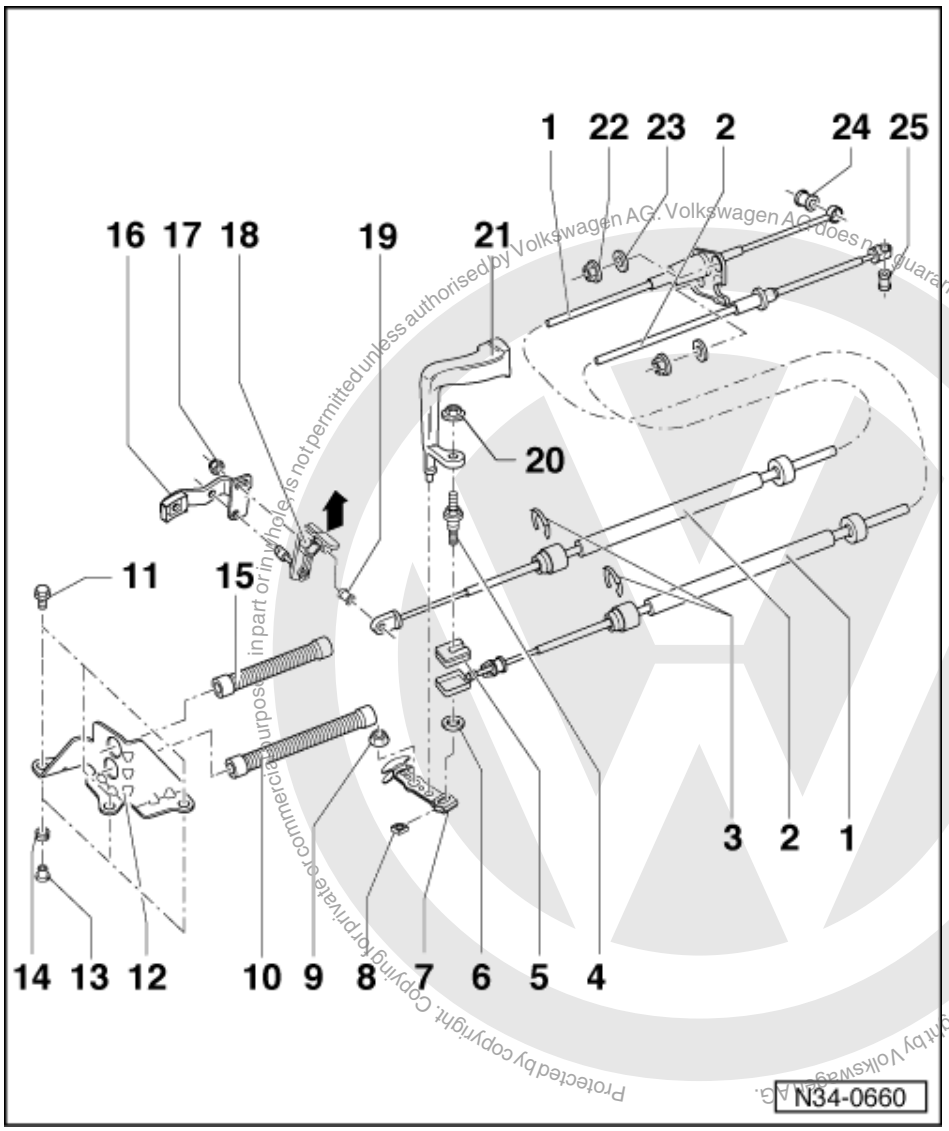

Protected by copyright. Copying for private or commercial purposes, in part or in whole, is not permitted unless authorised by Volkswagen AG. Volkswagen AG does not guarantee or accept any liability with respect to the correctness of information in this document. Copyright by Volkswagen AG.

19 Rubber bush
- For gate selector cable to actuating arm
- Press in and out with drift

20 Self-locking hexagon nut, 30 Nm
- For balance weight

21 Balance weight
- Remove to adjust selector mechanism

22 Self-locking hexagon nut, 15 Nm
- For selector cable to selector housing

23 Rubber washer

24 Rubber bush
- For gear selector cable/gear change lever
- Press in and out with drift

25 Rubber bush
- For gate selector cable/selector bracket
- Press in and out with a drift

satelettronica

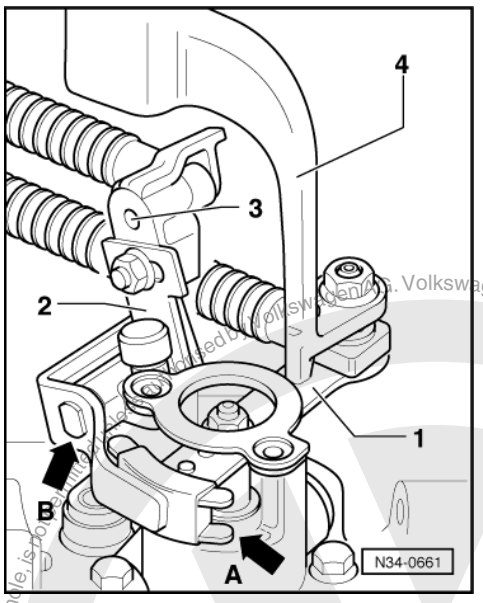

-> Installation position gear selector lever/relay lever actuating arm/balance weight

1 - Gear selector lever
2 - Relay lever
Locates in guide rail of gear shift lever (arrow -A-)
Lubricate with MoS2 grease
3 - Actuating arm
Flats (arrow -B-) of axis face mounting, relay lever only fits in one position
4 - Balance weight
Bolt on to gear selector lever

Note:

For ease of illustration the linkage and switch for reverse light have been removed.

Protected by copyright. Copyright by Volkswagen AG.
Copyrighted by Volkswagen AG. Volkswagen AG does not guarantee or accept any liability with respect to the correctness of information in this document. Copyright by Volkswagen AG.
Protected by copyright. Copying for private or commercial purposes, in part or in whole, is not permitted unless authorised by Volkswagen AG.
satelettronica

1.4 - Removing and installing gear stick housing

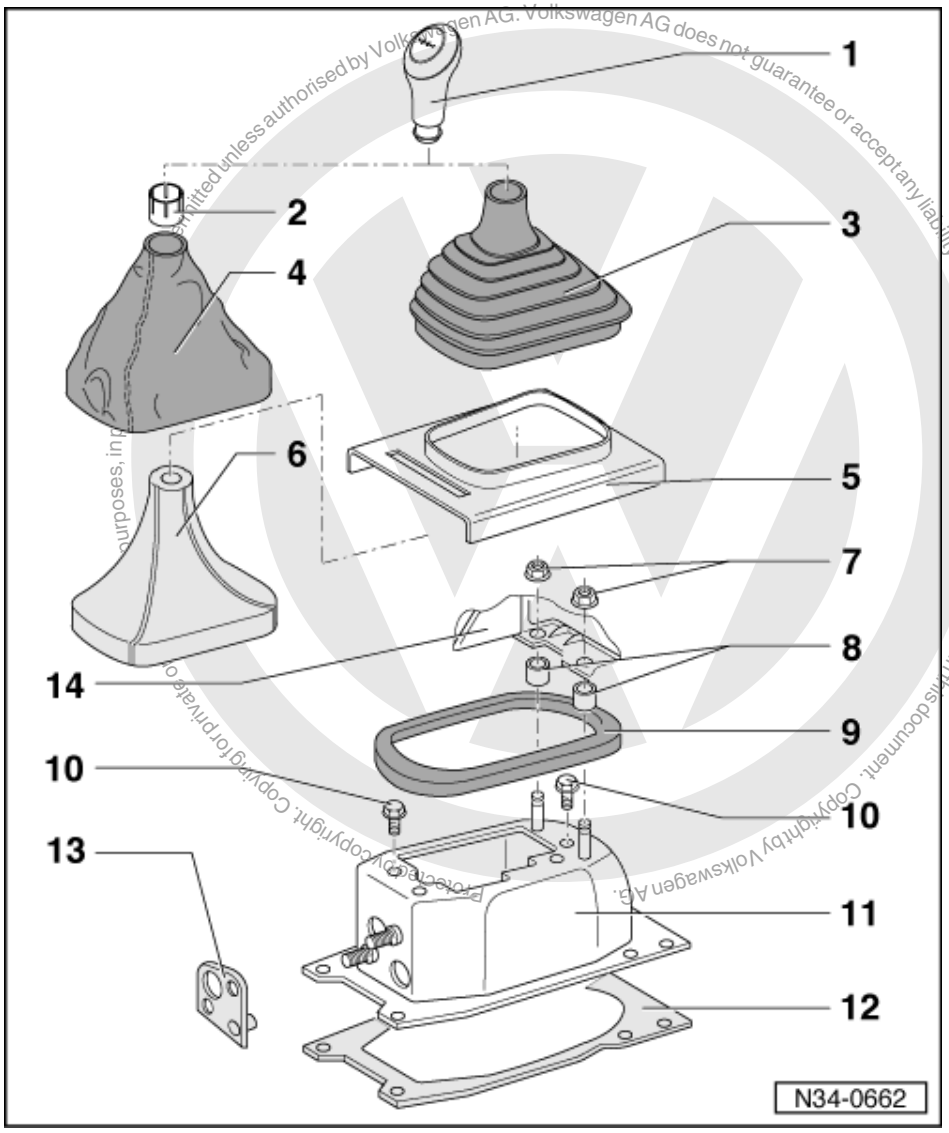

1 Gear stick knob
2 Sleeve
3 Rubber cover
- Connect to gear stick knob before installing =>Page 38

4 Leatherette gaiter
- Pull off from frame
- Connect to gear stick knob before installing =>Page 38

5 Frame
- Pull off centre console upwards

6 Boot
- Not fitted to all vehicles
- Pull off frame to remove

satelettronica

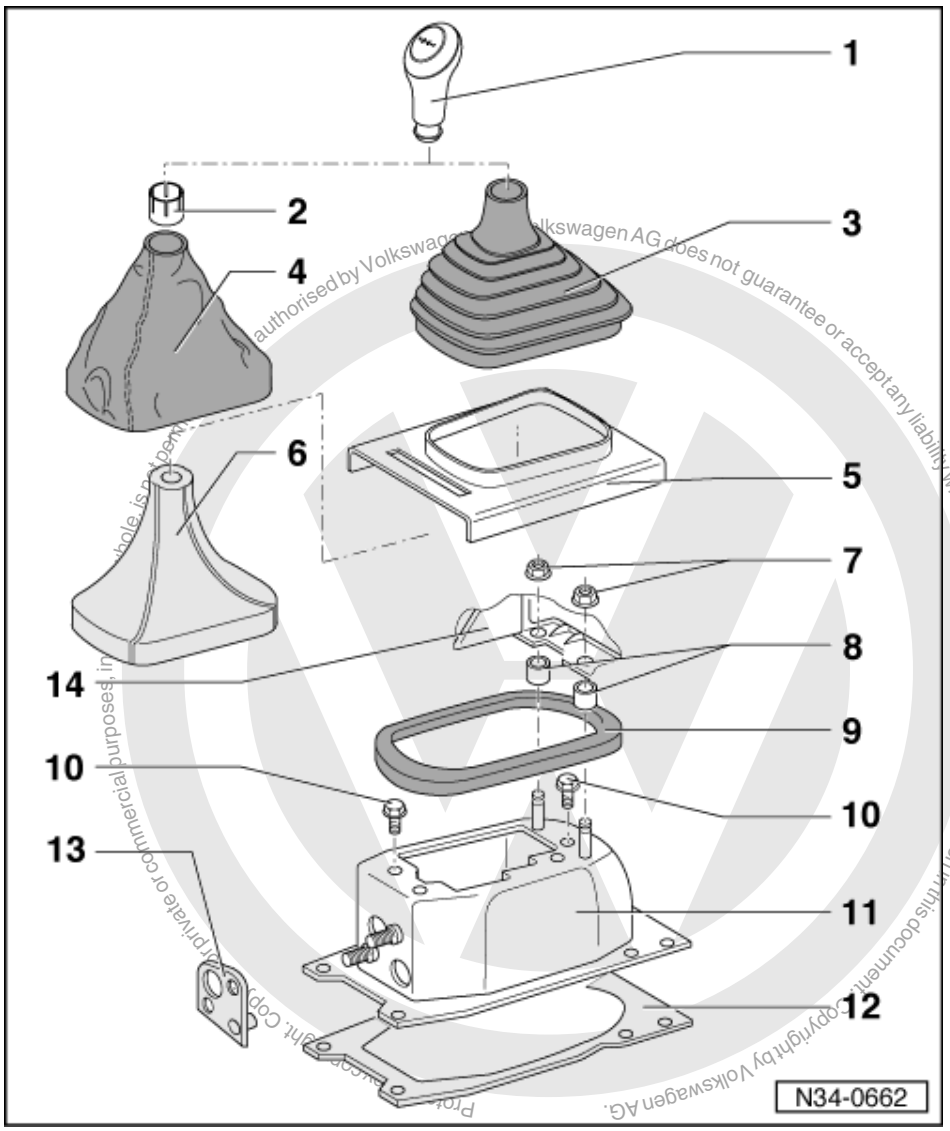

7 Plastic nut
- Console to gear stick housing
- Remove before removing gear selector mechanism

8 Spacer sleeve
- Between console and gear stick housing

9 Gasket
- Between gear stick housing and floor
- Self-adhesive
- Bond to gear stick housing

10 Hexagon bolt, 15 Nm
- For mounting plate to gear stick housing

11 Gear stick housing

satelettronica

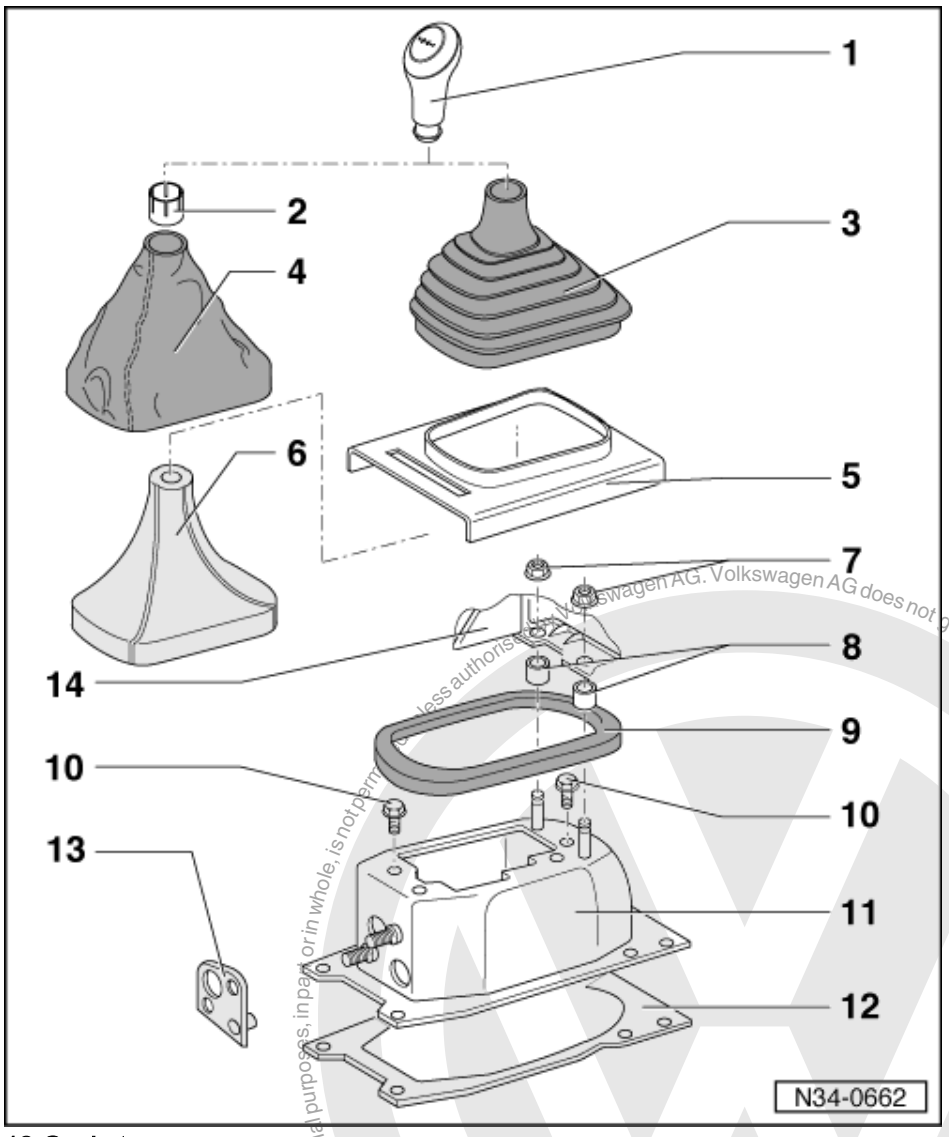

12 Gasket
- Self-adhesive
- Bond underneath gear stick housing

13 Gasket
- Between selector cables and gear stick housing

14 Central console

Protected by copyright. Copying for private or commercial purposes, in part or in whole, is not permitted unless authorised by Volkswagen AG. Volkswagen AG does not guarantee or accept any liability with respect to the correctness of information in this document. Copyright by Volkswagen AG.
satelettronica

1.5 - Installing gear stick gaiter to gear stick knob

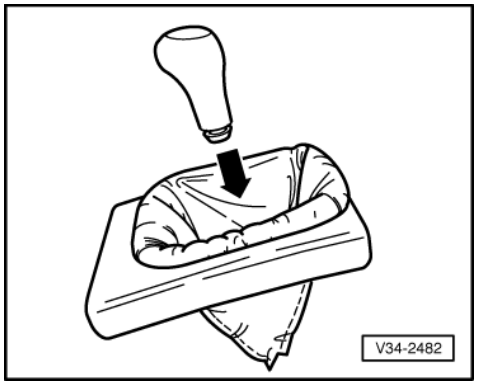

◆ Rubber boot

- Engage with gear stick knob

◆ Leatherette gaiter

- Turn cover inside out.
- -> Insert gear stick knob in gaiter (arrow).

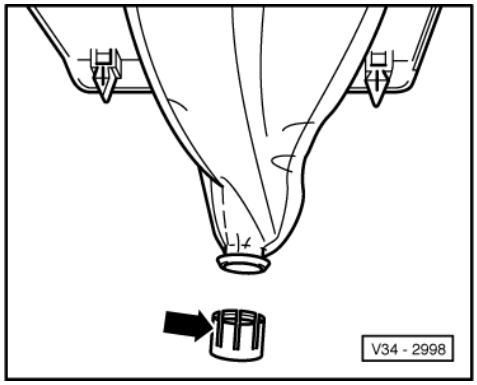

- -> Secure gaiter on gear stick knob with sleeve (arrow).
- Install gear stick knob and gaiter together.

Protected by copyright. Copyright by Volkswagen AG.
Volkswagen AG does not guarantee or accept any liability with respect to the correctness of information in this document. Copyright by Volkswagen AG. Volkswagen AG. is not permitted unless authorised by Volkswagen AG. Volkswagen AG does not guarantee or accept any liability with respect to the correctness of information in this document. Copyright by Volkswagen AG.
satelettronica

1.6 - Removing and installing gear stick

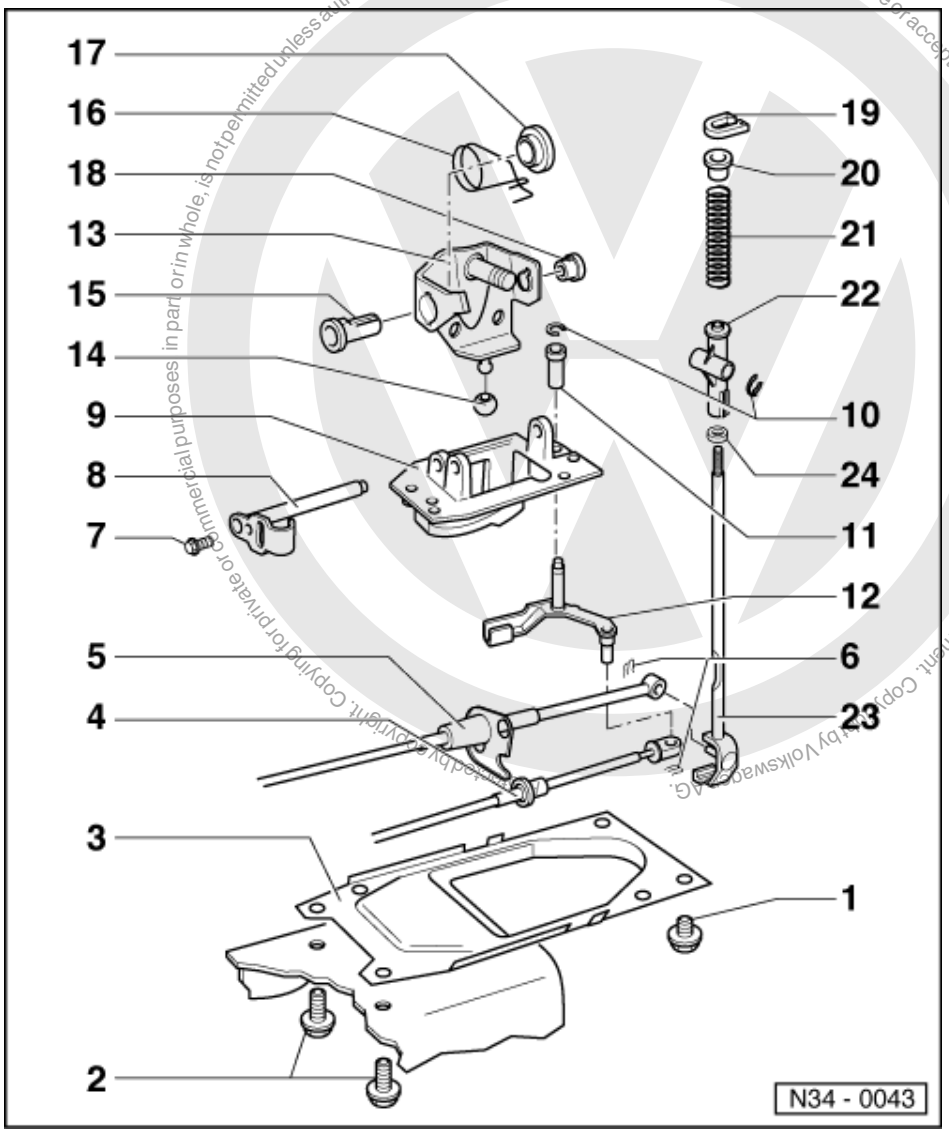

Note:

Lubricate all mountings and sliding surfaces with Polyuric grease Part No. G 052 142 A2.

1 Hexagon bolt, 25 Nm
- For gear stick housing to body

2 Hexagon bolt, 25 Nm
- For gear stick housing to body

3 Cover plate

4 Gate selector cable
- On gate selector bracket

5 Gear selector cable
- On gear lever

6 Spring clip

7 Hexagon bolt, 15 Nm
- For fulcrum pin to mounting plate

8 Fulcrum pin

satelettronica

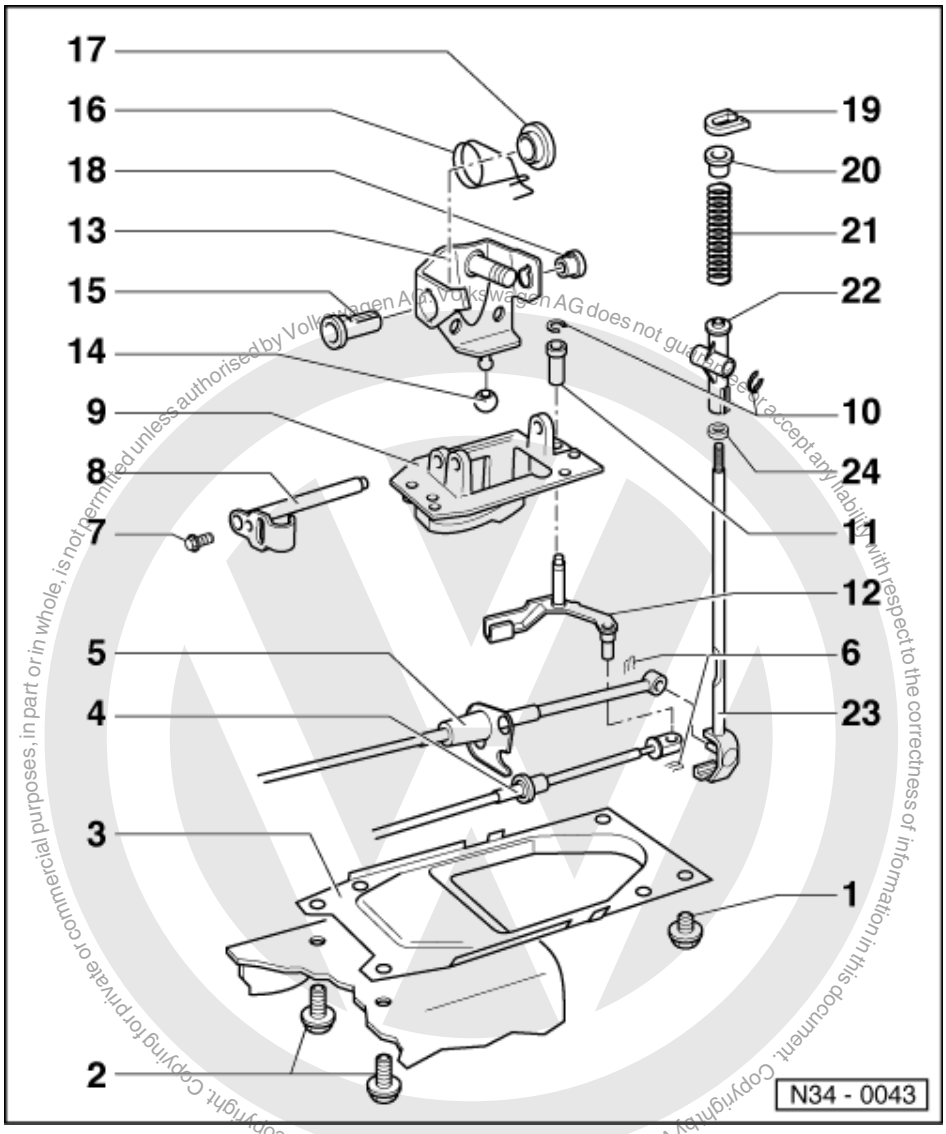

Protected by copyright. Copying for private or commercial purposes, in part or in whole, is not permitted unless authorised by Volkswagen AG. Volkswagen AG does not guarantee or accept any liability with respect to the correctness of information in this document. Copyright by Volkswagen AG.

9 Mounting plate
10 Lock washer
- Removing => Fig. 3

11 Bush
- Only fits in one position

12 Gate selector bracket
13 Gate selector housing
- Fit into mounting plate after fitting the complete gear stick

14 Cap
- Fitting => Fig. 1

15 Bush
16 Spring
17 Guide bush
- Locate on bush (item 15)

18 Bush

satelettronica

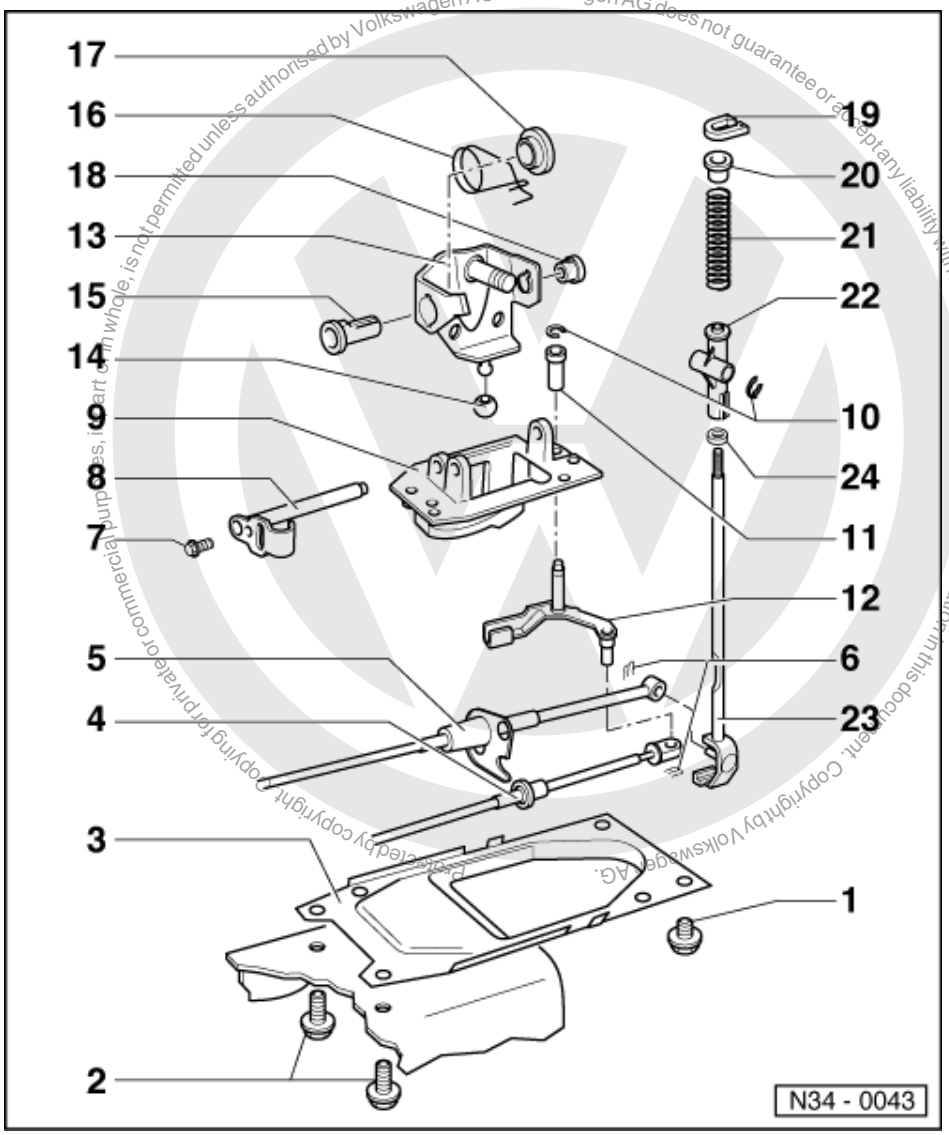

19 Circlip

- Removing and installing
  =>Fig. 2

20 Spacer sleeve

21 Spring

22 Gear stick guide

23 Gear stick

24 Damping washer

satelettronica

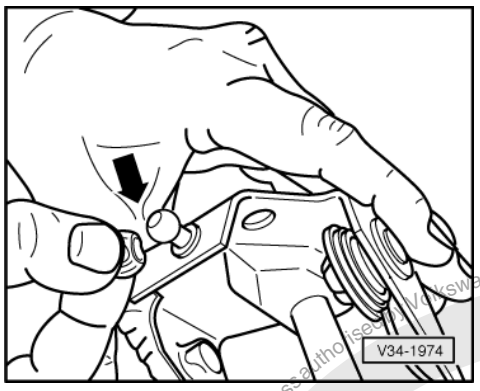

-> Fig.1 Fitting cap

- Press on from side (arrow 1).
- Press opening together to form a slot.

Note:

If necessary heat cap (e.g. hot water).

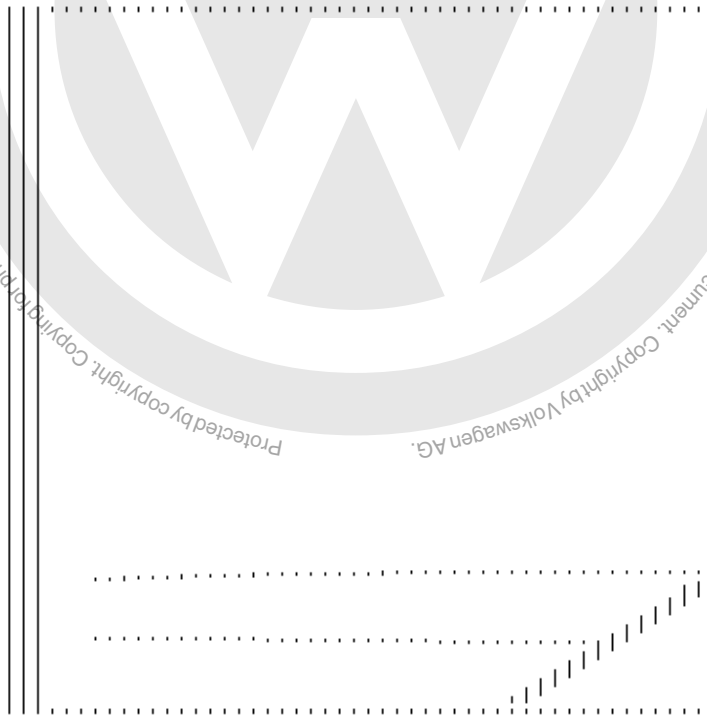

-> Fig.2 Removing and installing circlip

- To remove and install the circlip pull gear stick in arrow direction -A- and at the same time push down spacer bush onto stop with a screwdriver in arrow direction -B-.

Note:

Do not tilt spacer bush when pushing down. Carefully release pressure at groove in gear stick for circlip.

Protected by copyright. Copying for private or commercial purposes, in part or in whole, is not permitted unless authorised by Volkswagen AG. Volkswagen AG does not guarantee or accept any liability with respect to the correctness of information in this document. Copyright by Volkswagen AG.
satelettronica

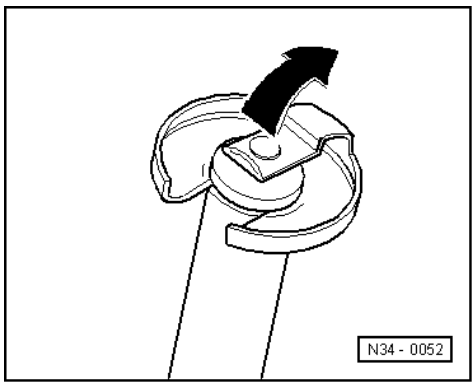

-> Fig.3 Removing lock plate for gate selector bracket and gear stick guide/gate selector housing

- Lift tab in direction of arrow.

1.7 - Adjusting gear selector mechanism

Special tools, testers and auxiliary items

- Gear lever gauge 3192
- Wedge 3192/1

Gearbox in neutral.

- Remove gear stick knob and gaiter => Page 35

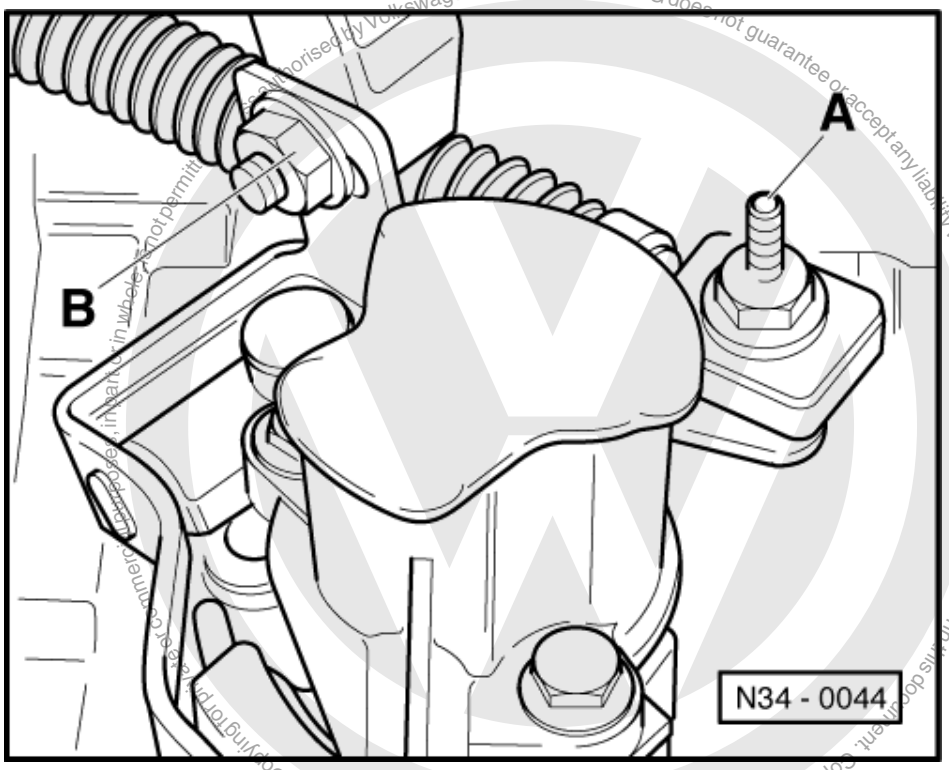

- Remove balance weight => Page 33 .

satelettronica

- -> Loosen bolt -A- and nut -B-, until the gear selector cable and actuating arm/gate selector cable are free to move in the elongated holes.

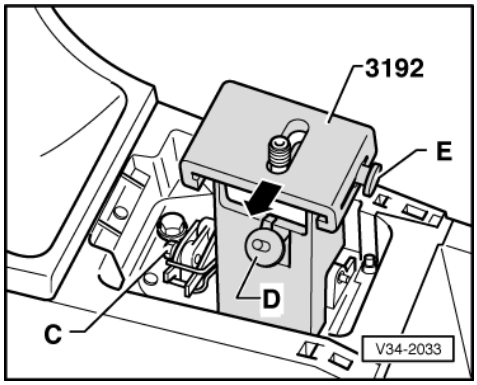

- -> Loosen bolt -C-, pull off foam seal in area of bolt -C- if necessary.
- Insert gear stick jig.
- Swing jig securing hook under mounting plate and tighten nut -D-.
- Press gear stick into left-hand detent of sliding piece.
- Press gear stick together with sliding piece to left onto stop (direction of arrow) and tighten sliding piece with bolt -E-.

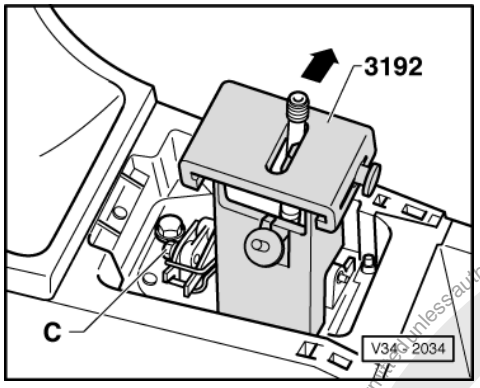

- -> Press gear stick into the right-hand detent (direction of arrow).
- Tighten bolt -C-.

- Insert wedge and pin.

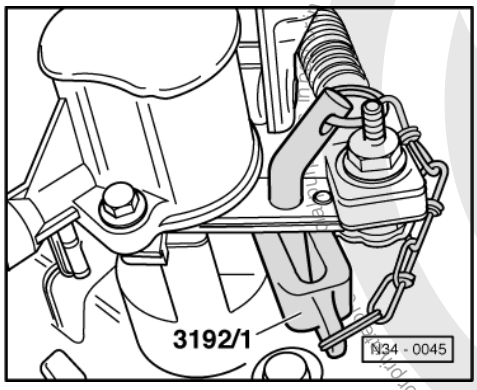

- -> Slide wedge between gear selector lever and selector cover plate, ensuring no play.

Note:

Wedge must not lift gear stick.

- In this position secure gear selector cable and actuating arm/gate selector cable, when doing this, check position of wedge.
- Remove gear stick jig.

satelettronica

- Fit gear stick knob and gaiter =>Page 35 .

Functional check

- The gear stick lever must rest in the 3rd/4th gear plane with gearbox in neutral.

- Operate clutch.
- Select all gears several times. Pay particular attention to the operation of the reverse gear catch.

Should a gear fail to engage smoothly after repeated selection, the selector shaft play (lift) should be checked as follows:

- Engage 1st gear.

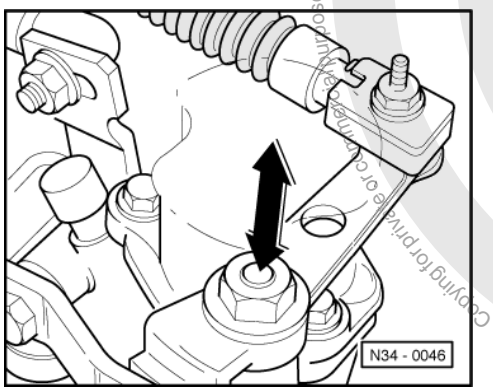

- Press gear stick to left onto stop and release.
- At the same time observe selector shaft in gear box (2nd mechanic).
- -> When moving the gear stick the selector shaft must move approx. 1 mm (in direction of arrow).

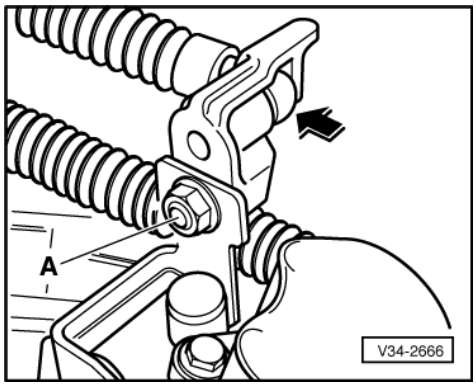

- -> Should this not be the case, disengage first gear and again loosen nut -A- for the actuating arm/gate selector cable mounting. (The gate selector cable has a certain amount of play at the mounting - due to the transfer elements).
- Take up gate selector cable play, by lightly pressing the mounting towards the bulkhead (direction of arrow).
- Tighten nut -A- in this position.

Notes:

The following are prerequisites for correct gear linkage adjustment:

- Perfect gear linkage operating and transfer elements.
- Rubber bushes for mounting the gear and gate selector cables to all operating elements in good condition (not worn).
- Gear and gate selector cables move smoothly.

Gearbox, clutch and clutch release mechanism must also be in good condition.

Protected by copyright. Copying for private or commercial purposes, in part or in whole, is not permitted unless authorised by Volkswagen AG. Volkswagen AG does not guarantee or accept any liability with respect to the correctness of information in this document. Copyright by Volkswagen AG.
satelettronica

2 - Removing and installing gearbox

2.1 - Removing and installing gearbox

Special tools, testers and auxiliary items

- Gearbox jack V.A.G 1383 A
- Gearbox support 3282
- Adjustment plate 3282/8
- Lifting beam 3336
- Grease G 000 100

Removing

- Disconnect earth strap from battery

Note:

Note radio coding for vehicles with coded radio.

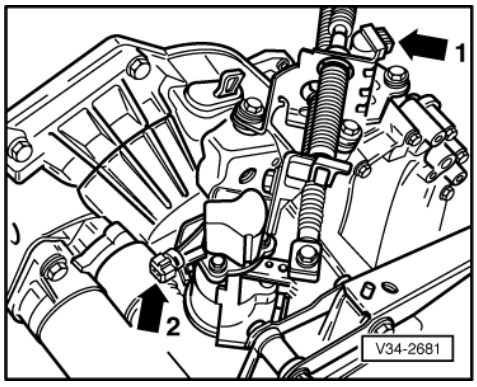

- Remove connecting pipe between charge air cooler and intake manifold pressure hose.

=> Repair group 21; Removing and installing parts of exhaust system Removing and installing parts of exhaust system

- -> Pull connector off road speed sender (arrow 1).

- Pull off reverse light connector (arrow 2).
- Disconnect all other electrical connections and earth wires from gearbox and from the engine/gearbox securing bolts.

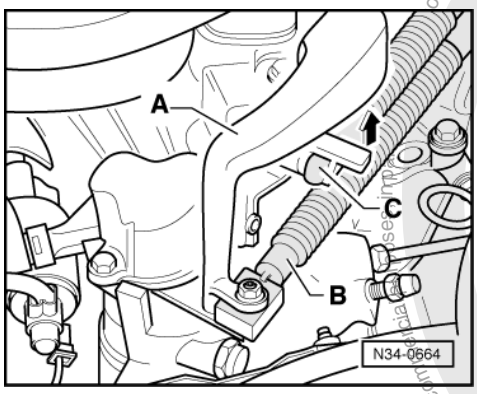

- -> Remove balance weight -A- and gear selector cable -B- from gear selector lever.
- Take off gear selector cable with washer and square nut (self-locking).

satelettronica

- Pull gate selector cable off actuating arm/relay lever -C- to do this lift lug in direction of arrow.

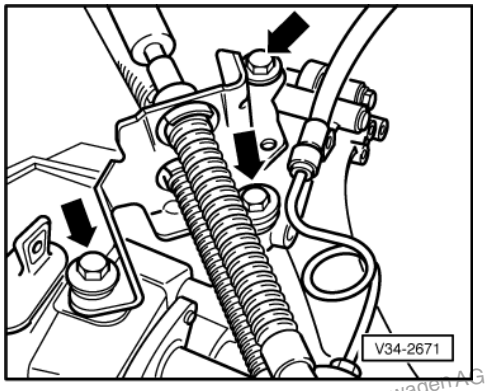

- -> Remove cable support bracket from gearbox (arrows), if necessary unclip hose at cable support bracket first.

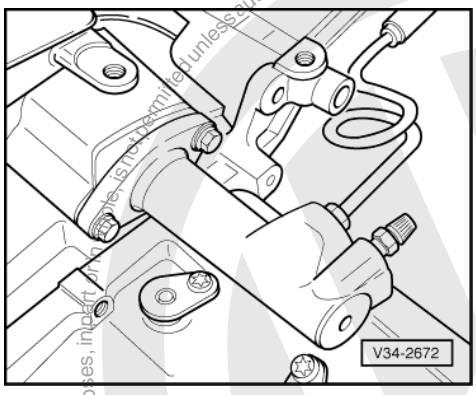

- -> Remove slave cylinder place to side and secure with wire, do not disconnect pipes.

Note:

Do not depress clutch pedal.

- Remove air hose from between air cleaner and air intake elbow.

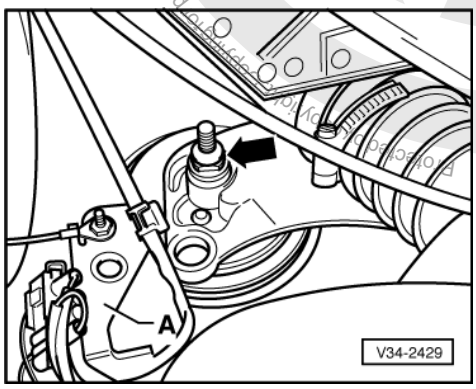

- -> Remove bolt (arrow) on engine console/sub-frame, right. If fitted remove connector mounting plate -A-.

Volkswagen AG. Volkswagen AG does not guarantee or accept any liability with respect to the correctness of information in this document. Copyright by Volkswagen AG.
Protected by copyright. Copying for private or commercial purposes, in part or in whole, is not permitted unless authorised by Volkswagen AG.
satelettronica

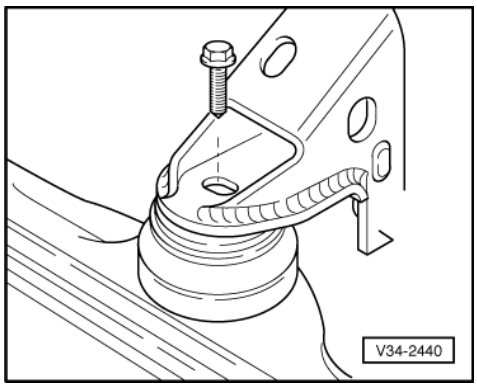

- -> Disconnect engine carrier at front console.
- If fitted remove retaining bracket for coolant hose, coolant pipe and securing plate for electrical connections from front of console.

- Remove coolant system expansion reservoir and lay to one side.

Note:

Do not open cooling system.

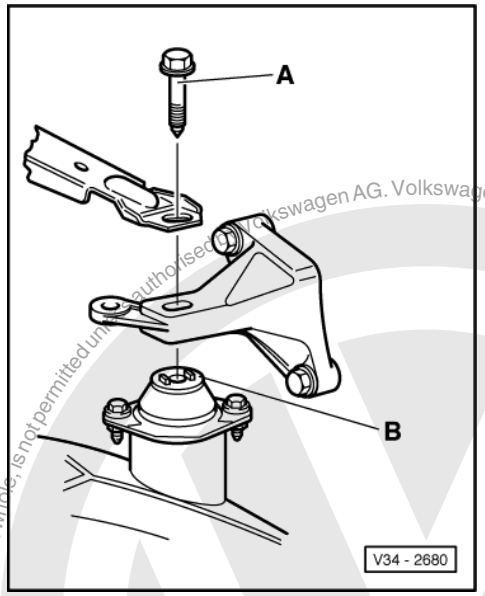

- -> Remove hexagon bolt -A- from left hand hand assembly mounting -B-.

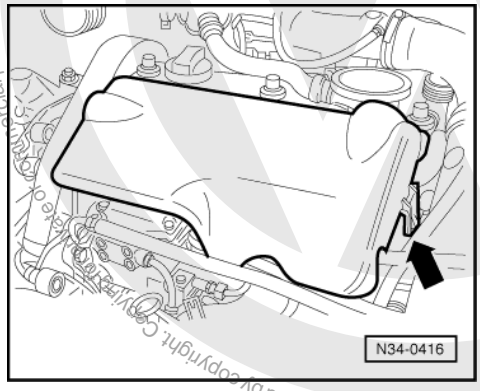

Protected by copyright. Copying for commercial purposes, in part or in whole, is not permitted unless authorised by Volkswagen AG. Volkswagen AG does not guarantee or accept any liability with respect to the correctness of information in this document. Copyright by Volkswagen AG.

satelettronica

Note:

- -> Remove cover from engine (arrow) if fitted.

- Remove earth strap at engine/gearbox upper securing bolt.
- Remove upper engine/gearbox securing bolts.

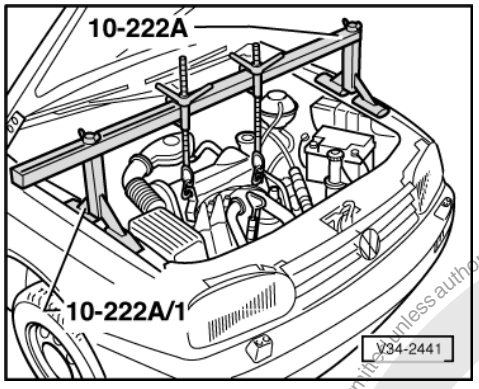

- -> Fit support bar 10-222A together with legs 10-222 A/1.
- Take weight of engine/gearbox assembly on the spindles.
- If not already removed, remove wiring and cable from gearbox.

- Remove insulation tray below engine/gearbox, if fitted.
- Remove charge air cooler.

=> Repair group 21; Removing and installing parts of exhaust system Removing and installing parts of exhaust system

- Remove power assisted steering pipe bracket from starter.
- Remove starter.

=> Repair group 27; Removing and installing starter. Removing and installing starter.

- Remove front console.
- Separate exhaust system in front of catalyst.

=> Repair group 26; Removing and installing parts of exhaust system. Removing and installing parts of exhaust system.

- Remove right hand inner constant velocity joint protective cover from engine if fitted.
- Disconnect drive shafts from drive flanges and tie-up.
- When doing this do not damage surface protection.

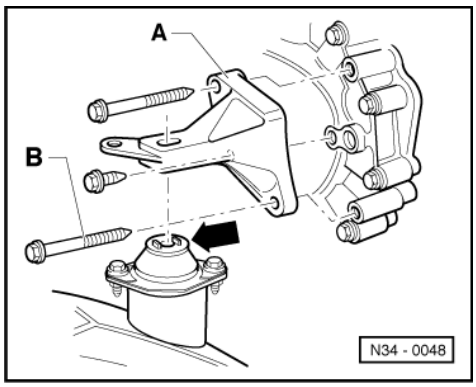

- -> Removing gearbox console -A- from gearbox.

To do this remove gearbox console securing bolt -B- as follows:

- Lift engine/gearbox assembly via both spindles until the exhaust system contacts the heat shield; ensure that selector cable support bracket is not jammed.

Protected by copyright. Copying for private or commercial purposes, in part or in whole, is not permitted unless authorised by Volkswagen AG. Volkswagen AG does not guarantee or accept any liability with respect to the correctness of information in this document. Copyright by Volkswagen AG.
satelettronica

- Push engine/gearbox assembly forwards (2nd mechanic required) and remove lower gearbox console securing bolt -B-.
- Then tie drive shaft up as high as possible. When doing this ensure sufficient clearance between constant velocity joint and flange shaft.

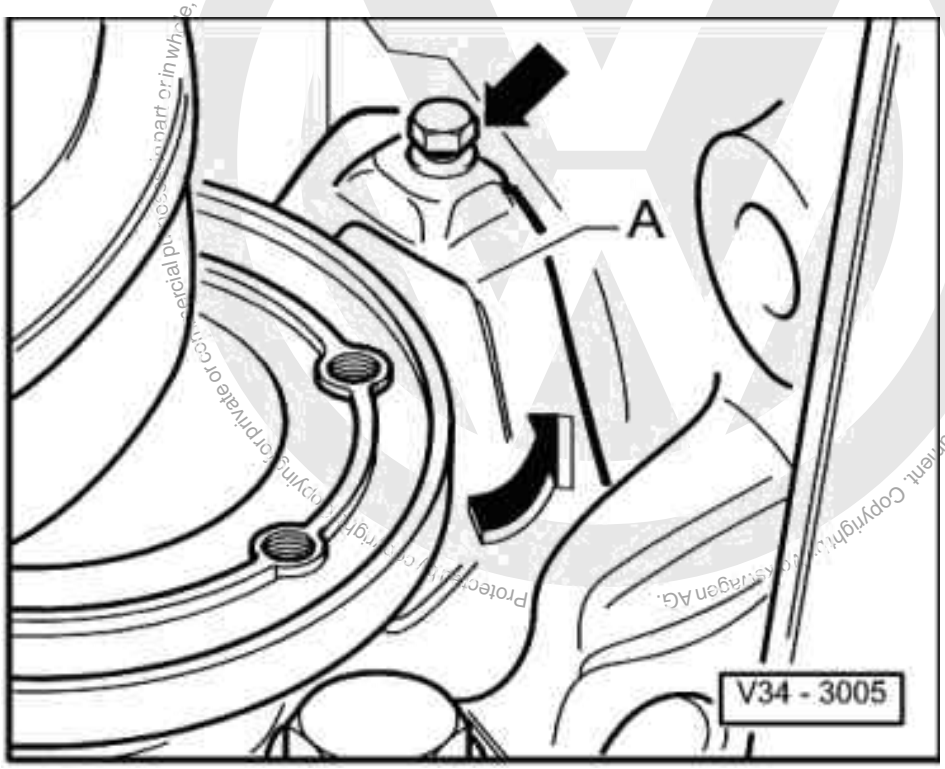

- -> Remove flywheel small cover plate -A- behind the right-hand flanged shaft (arrows).
- Remove large flywheel cover plate.
- Lower engine/gearbox assembly via both spindles to previous position, push as far as possible to the right and lower slightly using left spindle.

Note:

Do not damage P.A.S. pipe when moving engine/gearbox assembly.

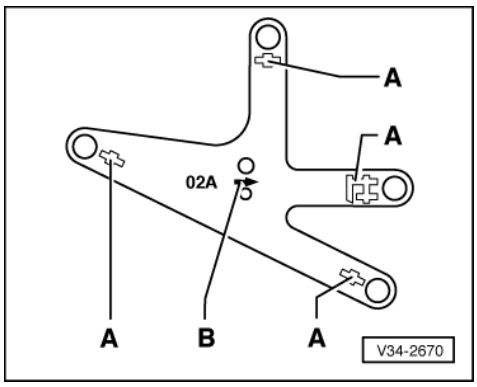

- Assemble gearbox jack with gearbox support 3282, adjustment plate 3282/8 for "02A" gearbox and support elements as follows:
- Place adjustment plate 3282/8 on gearbox support 3282. (Adjustment plate only fits in one position).
- Align arms of gearbox support according to holes in adjustment plate.
- -> Bolt on support elements -A-, as illustrated on adjustment plate.

Protected by copyright. Copying for private or commercial purposes, in part or in whole, is not permitted unless authorised by Volkswagen AG. Volkswagen AG does not guarantee or accept any liability with respect to the correctness of information in this document. Copyright by Volkswagen AG.
satelettronica

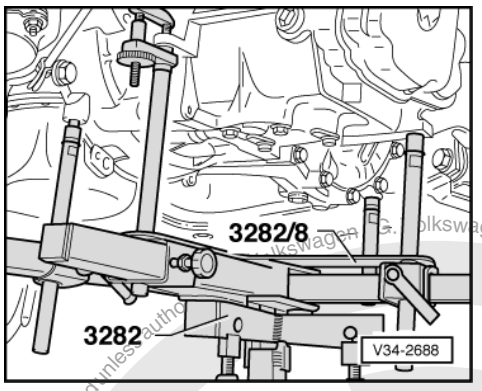

- -> Place gearbox jack under vehicle, arrow symbol -B- (=> Illustration V34-2670) on adjustment plate points to front of vehicle.
- Align adjustment plate parallel to gearbox and lock safety supports on gearbox.
- Remove lower engine/gearbox securing bolt.
- Press gearbox off dowels and lower carefully while pushing engine/gearbox assembly forward slightly and constantly correct the position via the gearbox jack spindles.

Note:

Do not damage P.A.S pipe when lowering gearbox.

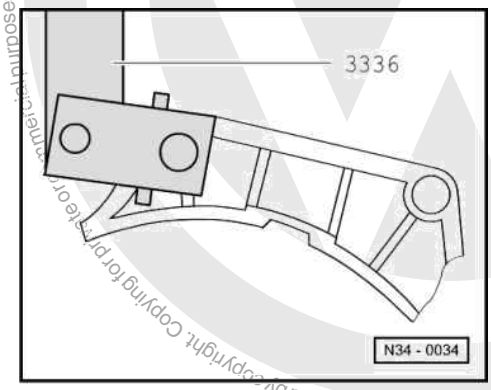

Transporting the gearbox

- -> Bolt gearbox lifting device 3336 to clutch housing.

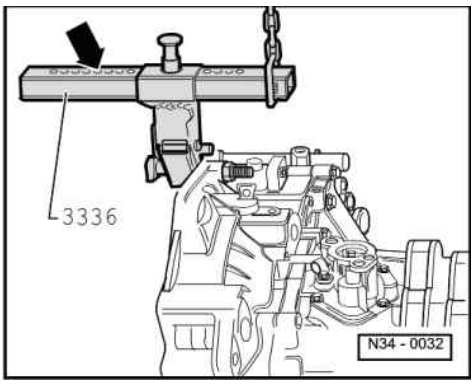

- -> Set support arm on sliding piece with locking pin (arrow).

No. of holes visible = 5

- Take gearbox out with workshop crane and gearbox lifting device 3336
- Place gearbox, for example onto transport container.

Protected by copyright. Copying for private or commercial purposes, in part or in whole, is not permitted unless authorised by Volkswagen AG. Volkswagen AG does not guarantee or accept any liability with respect to the correctness of information in this document. Copyright by Volkswagen AG.
satelettronica

Installing

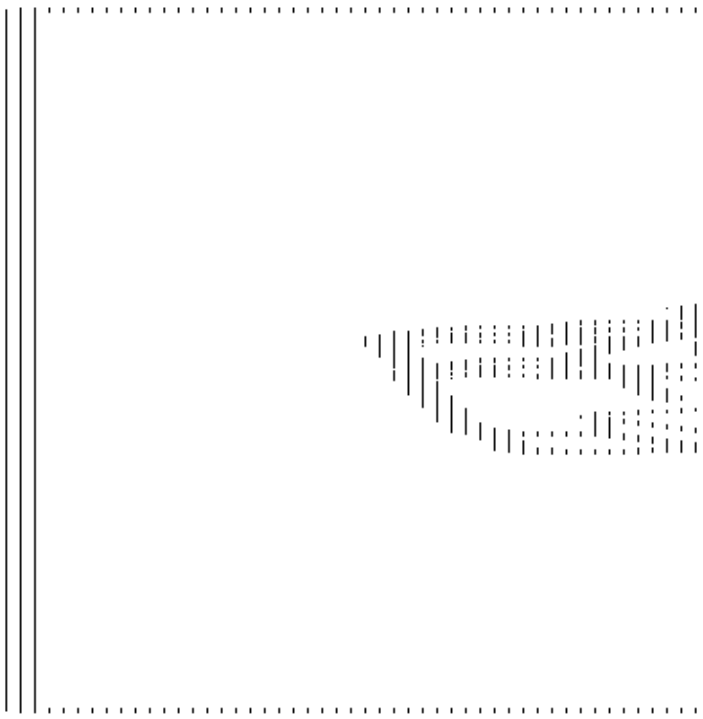

Notes:

- -> Before installing gearbox press clutch release lever towards gearbox housing and secure with assembly pin, assembly bolt or M 8 x 35 bolt. Remove after gearbox has been installed. The hole will then be sealed by the 3rd cable support bracket securing bolt or plugged.

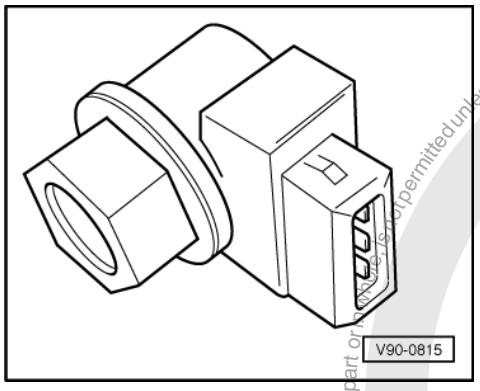

- -> When replacing gearbox, the senders for speedometer (Fig.), gear selector and relay lever must be transferred to new assembly.

- Clean input shaft splines and lightly grease with G000 100 grease.

The clutch plate must be able to slide lightly to and fro on the input shaft.

- Check whether dowel sleeves for aligning engine/gearbox are fitted in cylinder block, install if necessary.
- Ensure that the intermediate plate is correctly positioned on engine.
- Assemble gearbox jack with gearbox support 3282, adjustment plate 3282/8 for "02A" gearbox and support elements as follows:

Protected by copyright. Copying for private or commercial purposes, in part or in whole, is not permitted unless authorised by Volkswagen AG. Volkswagen AG does not guarantee or accept any liability with respect to the correctness of information in this document. Copyright by Volkswagen AG.

satelettronica

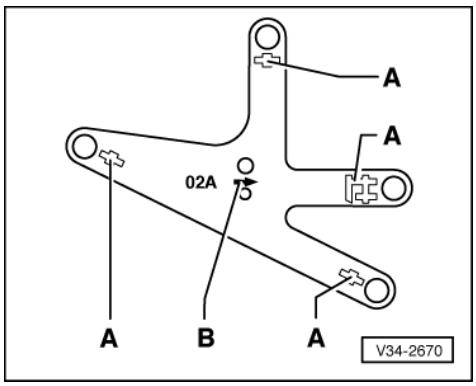

- Place adjustment plate 3282/8 on gearbox support 3282. (Adjustment plate only fits in one position).
- Align arms of gearbox support according to holes in adjustment plate.
- -> Bolt on support elements -A-, as illustrated on adjustment plate.

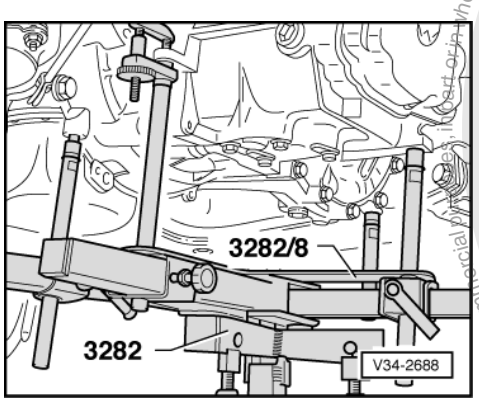

- Place gearbox on gearbox jack.
- Align adjustment plate and gearbox parallel with one another and lock safety supports on gearbox.
- -> Place gearbox jack under vehicle, arrow symbol -B- (=> Illustration V34-2670 on previous page) on adjustment plate points to front of vehicle.
- Insert gearbox.

Note:

Do not damage P.A.S pipe.

- Install lower engine/gearbox securing bolts.

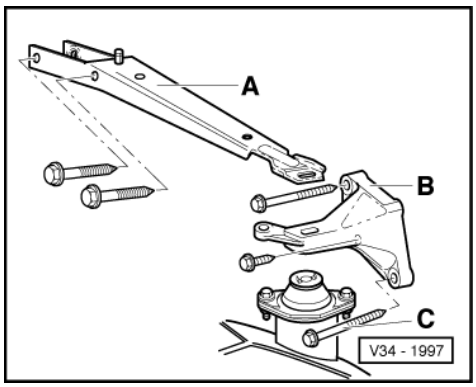

- Install upper engine/gearbox securing bolts.
- -> Install gearbox console -B- and left gearbox support -A-.

Install gearbox console securing screw -C- as follows:

- Lift engine/gearbox assembly via both spindles and push towards front end (2nd mechanic required) and then install lower gearbox console securing bolt -C-.
- Install front console.

Protected by copyright. Copying for private or commercial purposes, in part or in whole, is not permitted unless authorised by Volkswagen AG. Volkswagen AG does not guarantee or accept any liability with respect to the correctness of information in this document. Copyright by Volkswagen AG.
satelettronica

- Install starter.

=> Repair group 27; Removing and installing starter. Removing and installing starter.

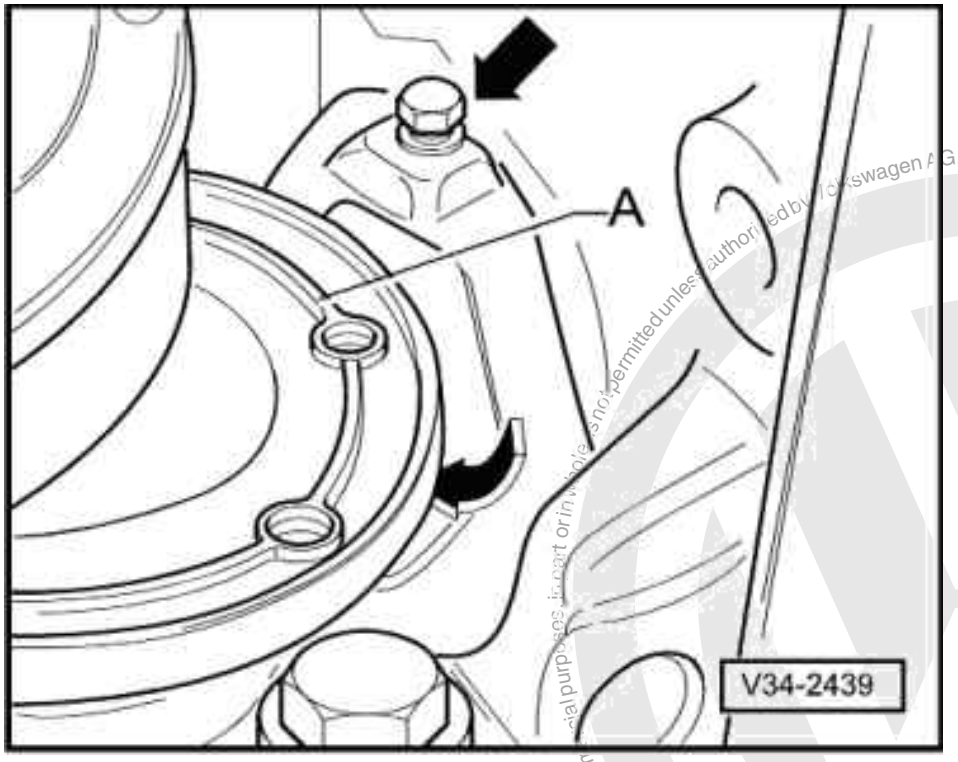

- Align engine/gearbox in installation position.
- Install power assisted steering pipe bracket on starter.
- -> Install small cover plate -A- behind right-hand drive flange (arrows), if fitted.
- Install large clutch cover plate.
- Fit drive shafts to gearbox.
- Install charge air cooler.

=> Repair group 21; Removing and installing parts of exhaust system Removing and installing parts of exhaust system

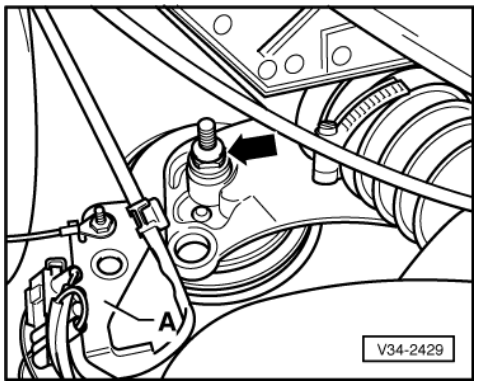

- Install insulation tray below engine/gearbox, if fitted.
- Install left gearbox assembly mounting hexagon bolt.
- -> Install bolt (arrow) on engine console/sub-frame, right. Fit connector mounting plate -A-, if fitted.
- Install air hose between air cleaner and air intake elbow.

Protected by copyright. Copying for private or commercial purposes, in part or in whole, is not permitted unless authorised by Volkswagen AG. Volkswagen AG does not guarantee or accept any liability with respect to the correctness of information in this document. Copyright by Volkswagen AG.
satelettronica

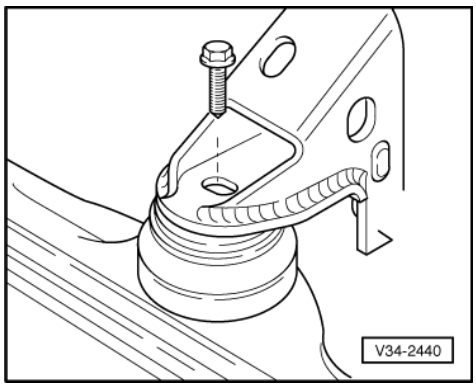

- -> Install front console securing bolt to engine mounting.

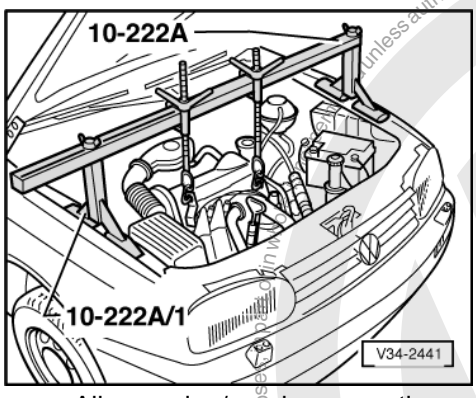

- -> Align engine/gearbox mountings stress-free by shaking assembly and tighten to tightening torque.

=> Repair group 10; removing and installing engine. removing and installing engine.

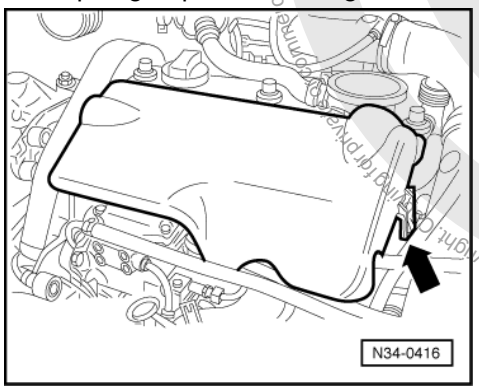

Note:

- -> Fit cover on engine if present (arrow).

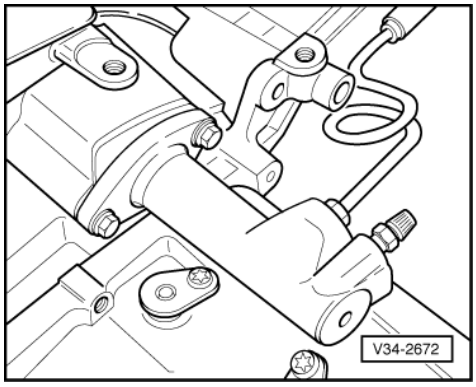

Protected by copyright. Copying for private and commercial purposes, in other media or on websites is prohibited unless authorised by Volkswagen AG. Volkswagen AG does not guarantee or accept any liability with respect to the correctness of information in this document. Copyright by Volkswagen AG.
satelettronica

Protected by copyright. Copyright by Volkswagen AG. Volkswagen AG does not guarantee or accept any liability with respect to the correctness of information in this document.

- -> Install slave cylinder

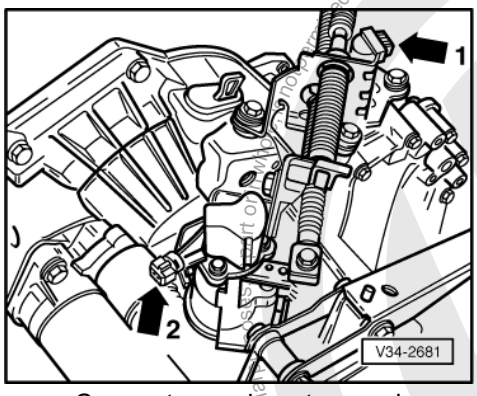

- -> Connect speedometer sender connector (arrow 1).
- Connect reverse light connector (arrow 2).

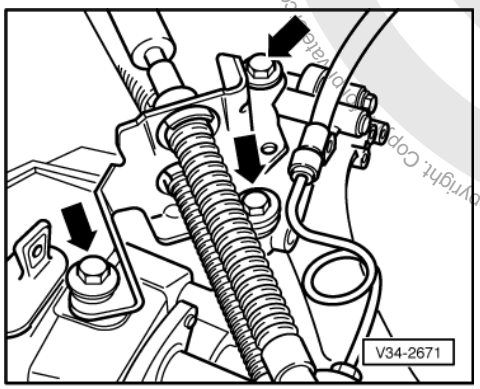

- -> Install cable support bracket on gearbox (arrows), if necessary push hose onto cable support bracket.

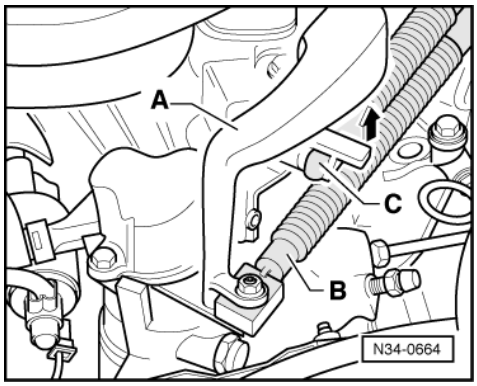

- -> Install gear selector cable -B- and balance weight -A- on gear selector lever.
- Fit gate selector cable on follower/relay lever -C- to do this lift lug in direction of arrow.
- Fit connecting pipe between charged air cooler and intake manifold pressure hose.

=> Repair group 21; Removing and installing parts of exhaust system Removing and installing parts of exhaust system

- Secure coolant system expansion reservoir.
- Reconnect earth strap to battery.

Note:

Note radio coding for vehicles with coded radio.

- Checking gearbox oil =>Page 58 .

satelettronica

- Adjusting gear change linkage => Page 43 .

Tightening torques

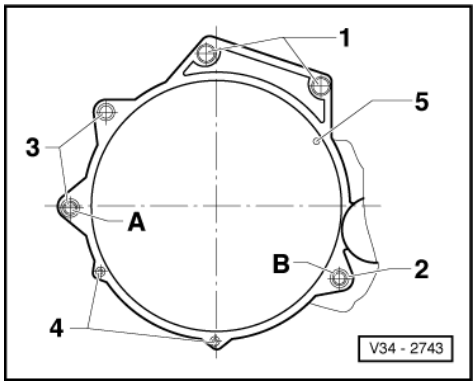

-> Gearbox to engine

Pos.	Bolt	Qty.	Nm
1	M 12 x 55	2	80
2	M 12 x 64	1	80
31)	M 10 x 160	2	60
4 2)	M 7 x 12	2	10
5 3)	M 6 x 8	1	10

1) Also starter to gearbox

2) Flywheel large cover plate

3) Flywheel small cover plate

Pos. A + B - Dowel sleeves

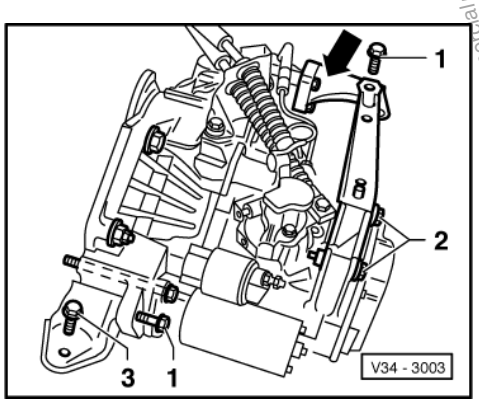

-> Assembly mountings

Pos.	Bolt	Qty.	Nm
1	M 10 x 45	1	50
2	M 10 x 62	2	45
31)	M 10 x 30	1	50

Left gearbox console to gearbox (arrow)	25 Nm

Protected by copyright. Copying for private or commercial purposes, in part or in whole, is not permitted unless authorised by Volkswagen AG. Volkswagen AG does not guarantee or accept any liability with respect to the correctness of information in this document. Copyright by Volkswagen AG.
satelettronica

Right engine console to assembly carrier	60 Nm

Drive shaft to flange shaft	45 Nm
Selector cable support bracket to gearbox	25 Nm
Selector cable bolt to gearbox selector lever	25 Nm
Balance weight to gearbox selector lever	30 Nm

3 - Checking gearbox oil

3.1 - Checking gearbox oil

Gear oil specification => Page 2

- Remove insulation tray below engine/gearbox, if fitted.
- Remove charge air cooler.

=> Repair group 21; Removing and installing parts of exhaust system Removing and installing parts of exhaust system

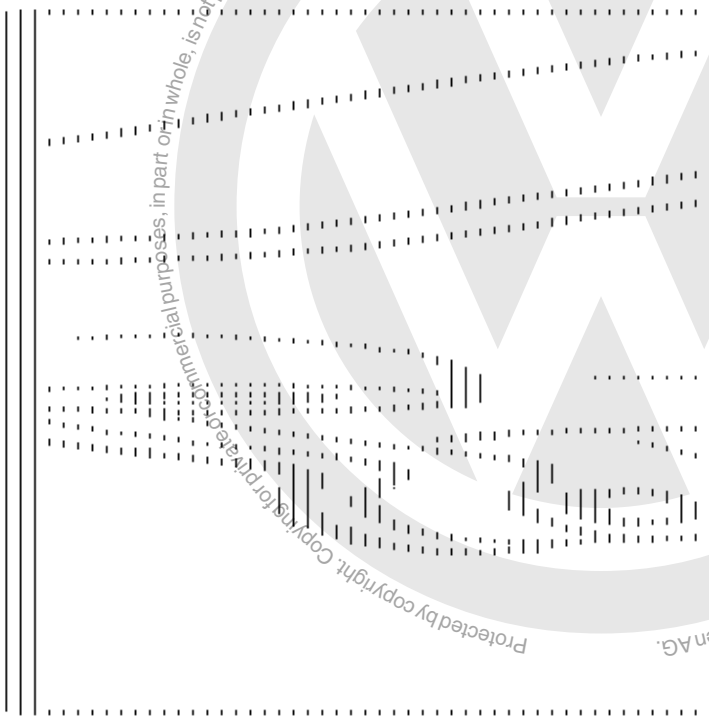

- -> Remove plug (arrow) to check oil

The oil level is correct when the gearbox is full to the lower edge of the filler hole.

- Fit plug (arrow).

When filling with new oil note following:

- Remove bolt (arrow).
- Top up oil to lower edge of filler hole.
- Fit plug (arrow).
- Start engine, engage gear and allow gearbox to turn for approx. 2 minutes.

Protected by copyright. Copying for private or commercial purposes, in part or in whole, is not permitted unless authorised by Volkswagen AG. Volkswagen AG does not guarantee or accept any liability with respect to the correctness of information in this document. Copyright by Volkswagen AG.
satelettronica

- Switch off engine and remove bolt (arrow).

- Top up oil to lower edge of filler hole again.
- -> Fit plug (arrow).

Protected by copyright. Copying for private or commercial purposes, in part or in whole is not permitted unless authorised by Volkswagen AG. Volkswagen AG does not guarantee or accept any liability with respect to the correctness of information in this document. Copyright by Volkswagen AG.
satelettronica

4 - Dismantling and assembling gearbox

4.1 - Dismantling and assembling gearbox

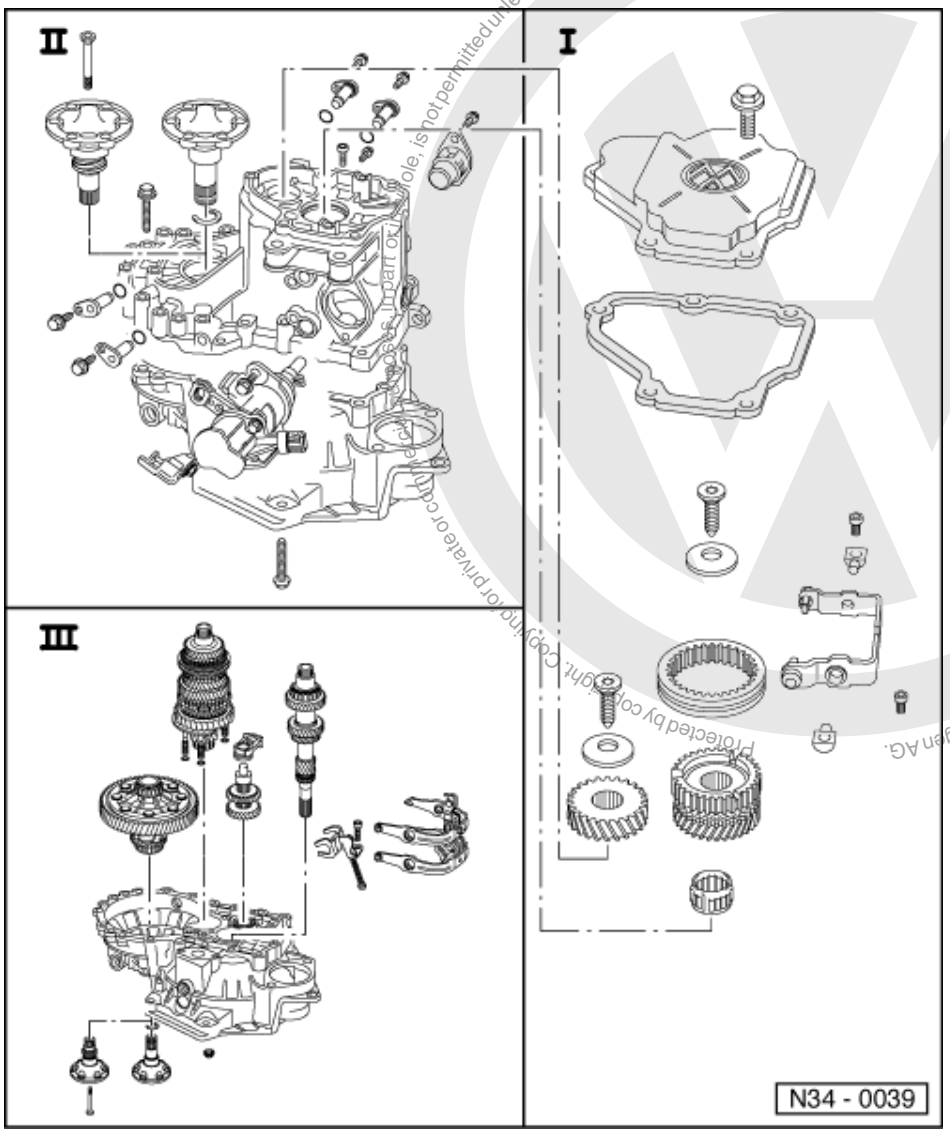

Volkswagen AG. Volkswagen AG does not guarantee or accept any liability with respect to the correctness of information in this document. Copyright by Volkswagen AG. Protected by copyright. Copying for private or commercial purposes, in part or in whole, is not permitted unless authorised by Volkswagen AG.

satelettronica

Sequence for dismantling and assembling => Page 70

I - Removing and installing cover for gearbox housing and 5th gear => Page 61

II - Dismantling and assembling gearbox housing and shift mechanism => Page 64

III - Dismantling and assembling input shaft, output shaft, differential and selector forks => Page 67

4.2 - Removing and installing cover for gearbox housing and 5th gear

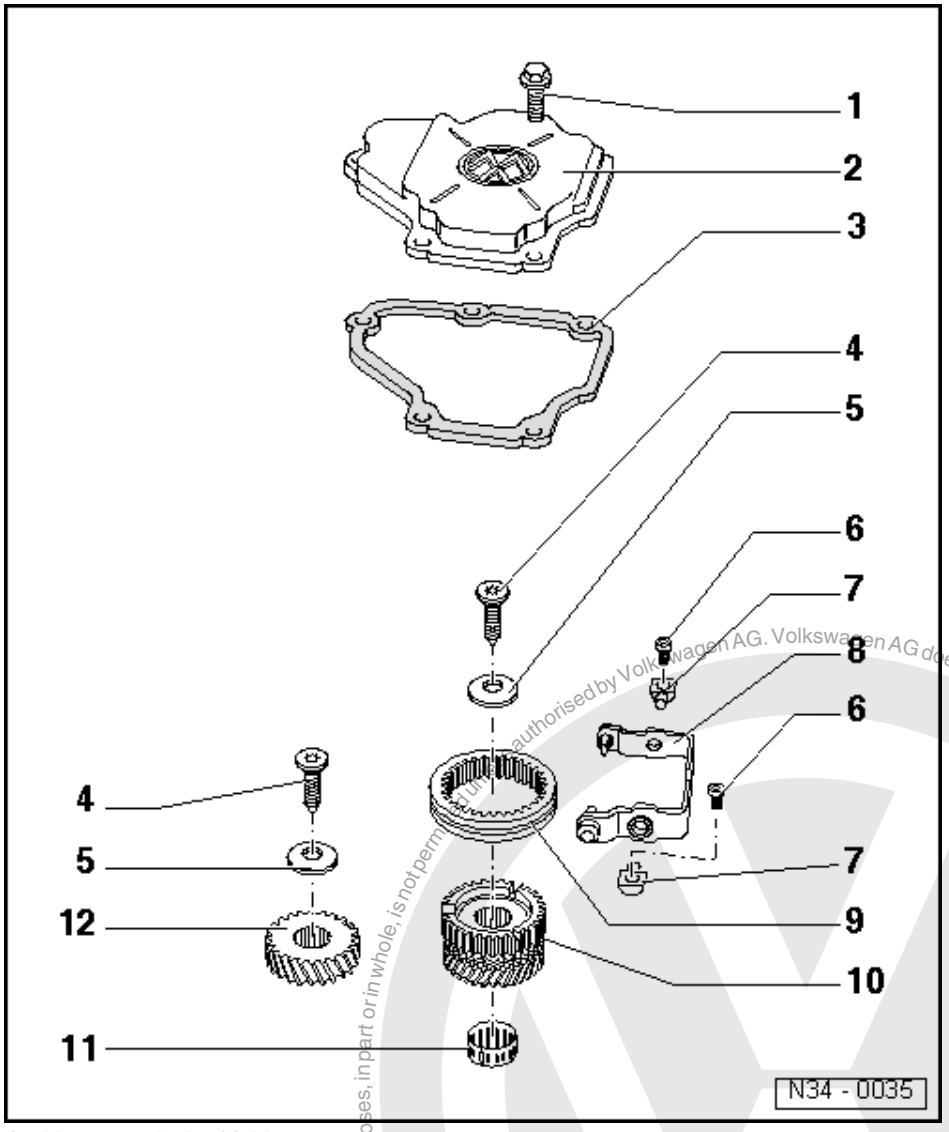

1 Hexagon bolt, 10 Nm
- For gearbox housing cover

2 Gearbox housing cover

Note:

If the gearbox cover is fitted with the gearbox installed, check oil level as follows:

- Fill with oil up to lower edge of filler hole and fit filler plug.
- Start engine, engage gear and allow gearbox to turn for approx. 2 minutes.
- Switch off engine and top up gearbox oil to lower edge of filler hole again.

Protected by copyright. Copying for private or commercial purposes, in part or in whole, is not permitted unless authorised by Volkswagen AG. Volkswagen AG does not guarantee or accept any liability with respect to the correctness of information in this document. Copyright by Volkswagen AG.
satelettronica

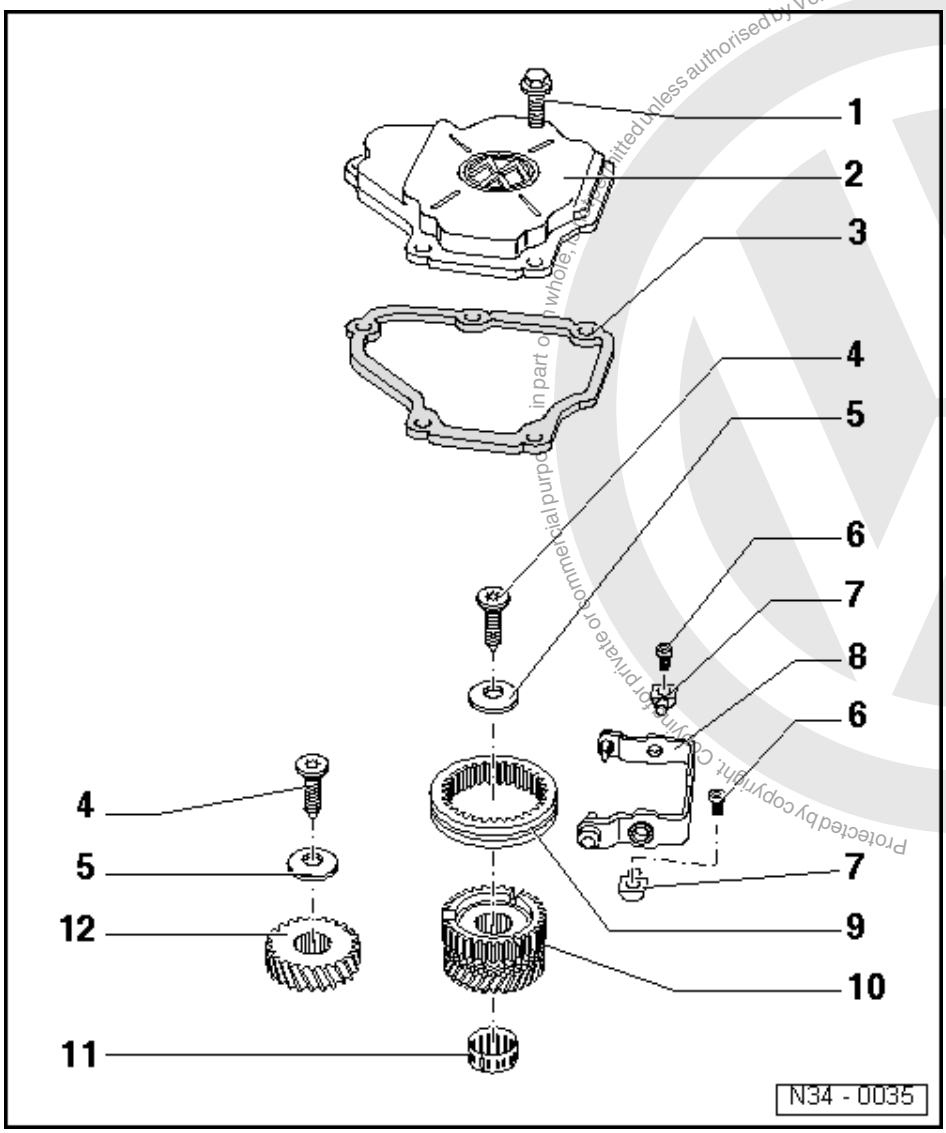

3 Gasket

4 Torx socket head bolt M10, 80 Nm
- Fitted piece on bolt head holds saucer spring washer in position

5 Dished washer
- Installing => Page 85

6 Socket head bolt, 25 Nm
- For pivot pin to gearbox housing

7 Pivot pin

8 5th gear selector fork
- Dismantling and assembling => Page 101
- Adjusting =>Page 86

Protected by copyright. Copying for private or commercial purposes, in part or in whole, is not permitted unless authorised by Volkswagen AG. Volkswagen AG does not guarantee or accept any liability with respect to the correctness of information in this document. Copyright by Volkswagen AG.
satelettronica

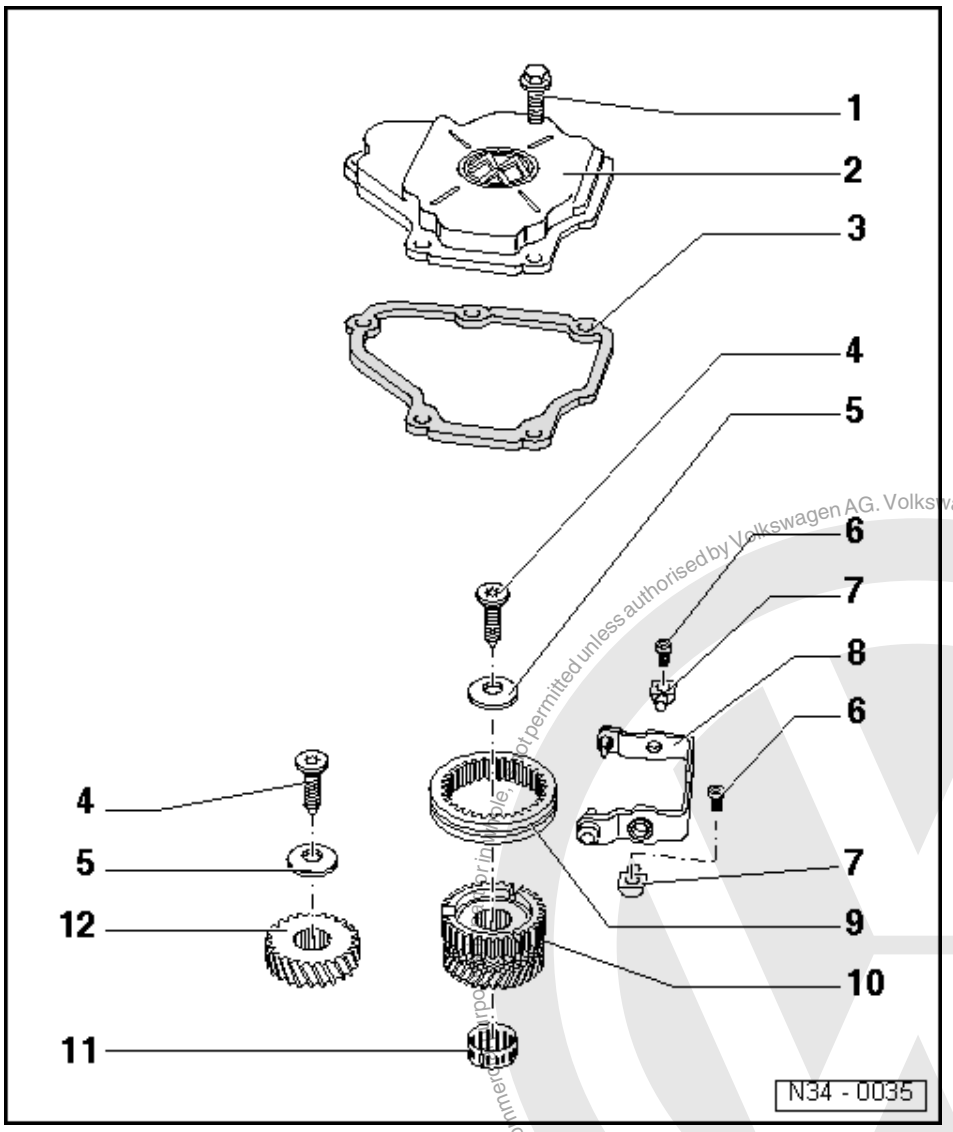

9 5th gear locking collar
- Installation position =>Page 83
- Adjusting =>Page 86

10 Synchro-hub with 5th gear and synchronizing ring
- Dismantling and assembling => Page 117

11 Needle roller bearing

12 5th speed gear wheel
- Installation position => Page 82

Protected by copyright. Copying for private or commercial purposes, not permitted unless authorised by Volkswagen AG. Volkswagen AG does not guarantee or accept any liability with respect to the correctness of information in this document. Copyright by Volkswagen AG.
satelettronica

4.3 - Removing and installing gearbox housing and selector mechanism

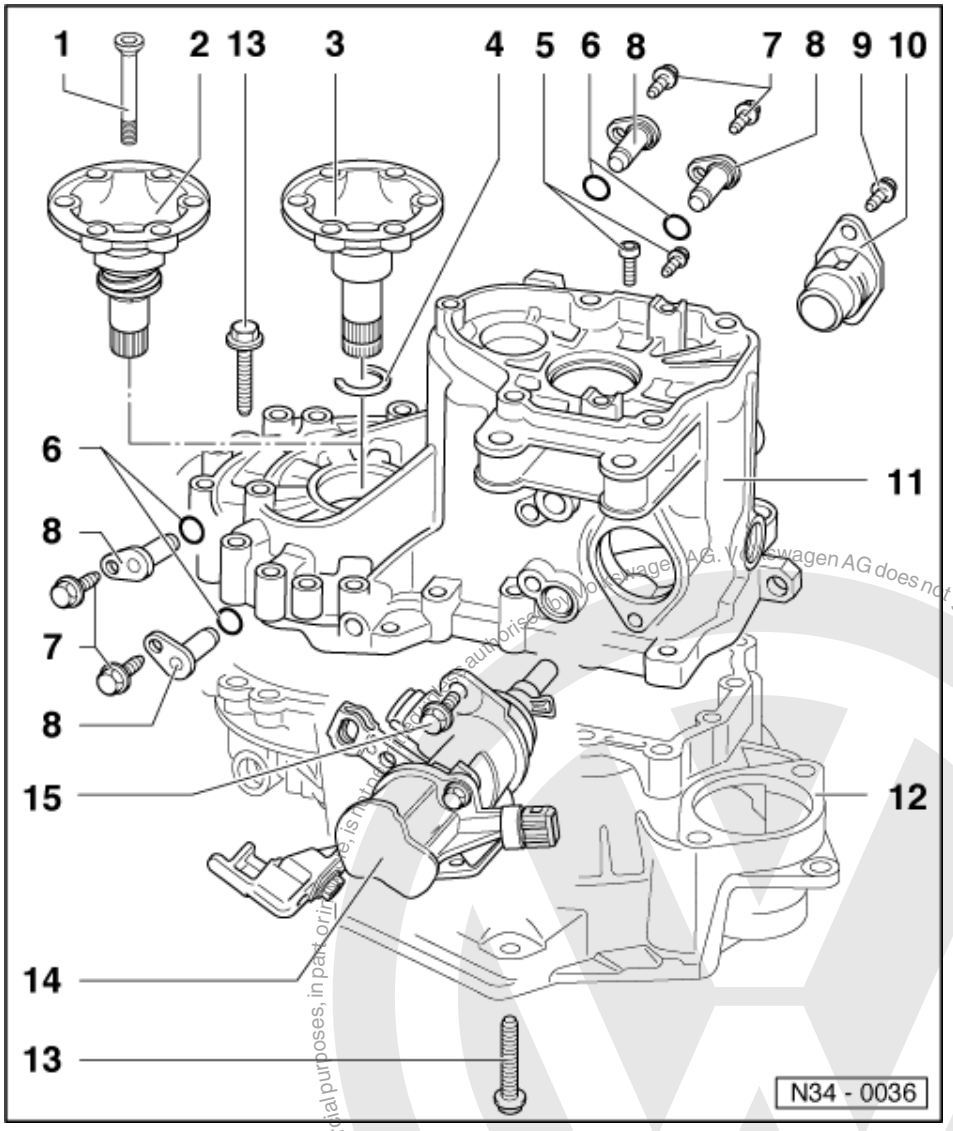

1 Cone head bolt, 25 Nm
- Installed in gearboxes with springs behind flange shafts

2 Flange shaft with spring
- Removing and installing => Page 154
- Complement=> Page 165

3 Flange shaft
- Secure with circlip
- Removing => Page 73
- Driving in => Page 86

Protected by copyright. Copying for private or commercial purposes, in part or in whole, is not permitted unless authorised by Volkswagen AG. Volkswagen AG does not guarantee or accept any liability with respect to the correctness of information in this document. Copyright by Volkswagen AG.
satelettronica

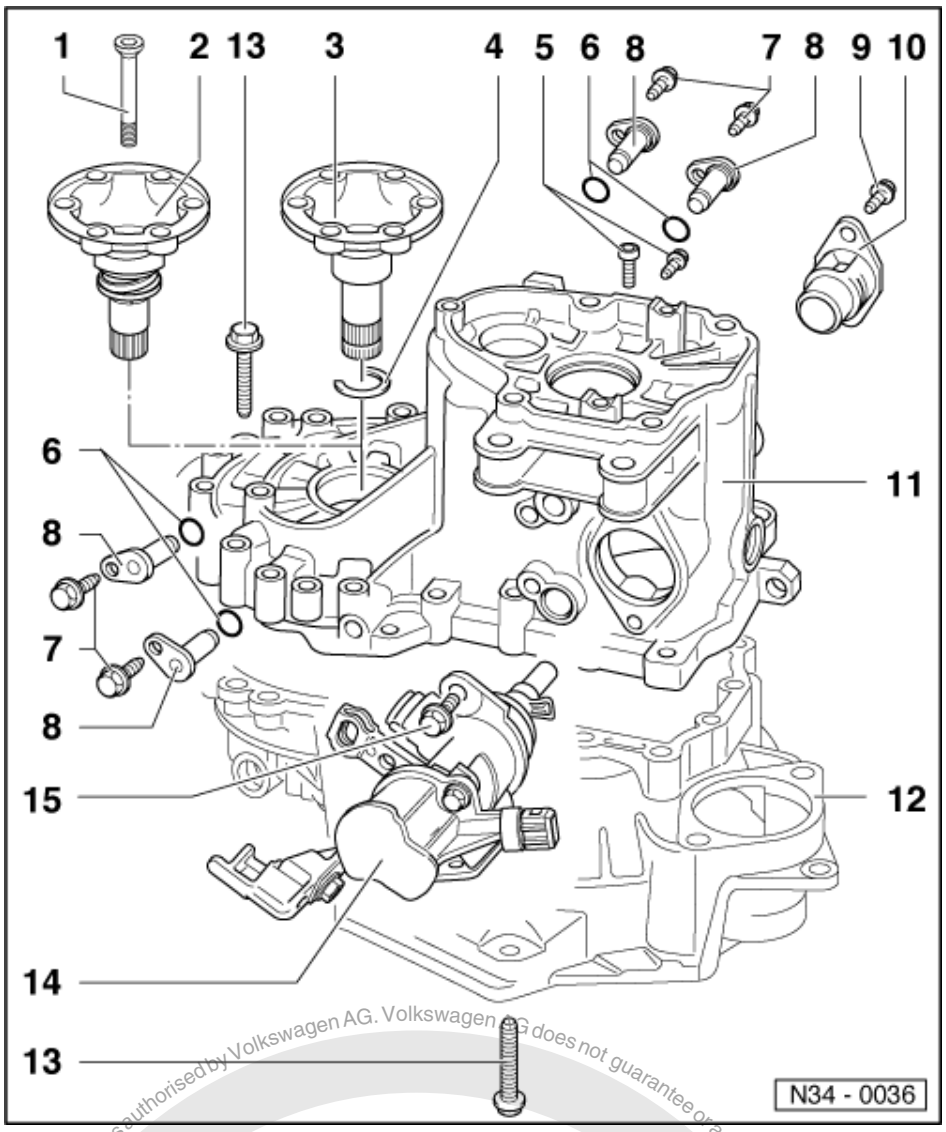

4 Circlip
- Always renew =>page 86

5 Torx socket head bolt, 30 Nm
- For reverse shaft support
- Self-locking
- Always renew

6 O-ring
- Always renew

7 Bolt, 25 Nm

8 Pivot pin

9 Bolt, 25 Nm

10 Cover plate

11 Gearbox housing
- Servicing => Page 87

Protected by copyright. Copying for private or commercial purposes, in part or in whole, is not permitted unless authorised by Volkswagen AG. Volkswagen AG does not guarantee or accept any liability with respect to the correctness of information in this document. Copyright by Volkswagen AG.
satelettronica

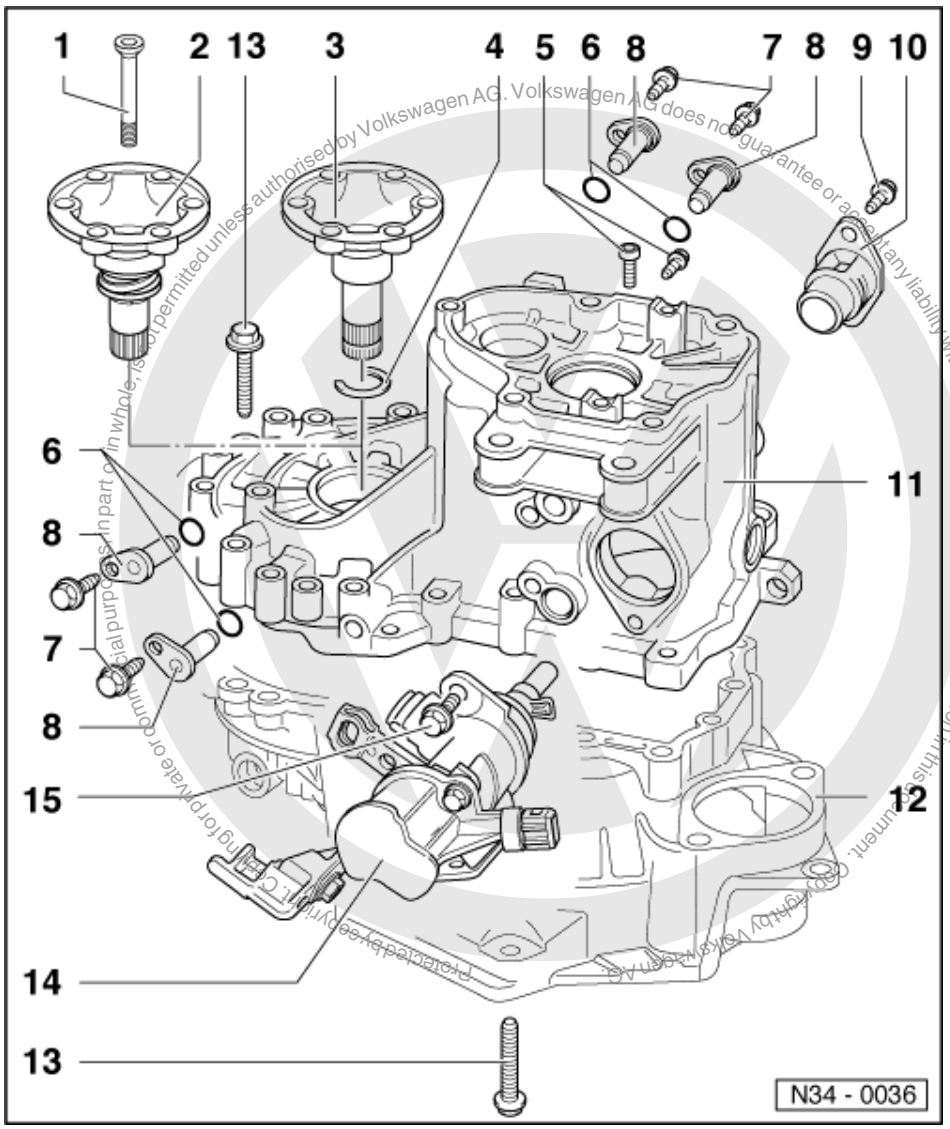

12 Clutch housing

- Servicing => Page 87

13 Hexagon bolt, 25 Nm then turn 90°further

14 Selector mechanism

- Dismantling and assembling =>from Page 96

15 Hexagon bolt, 25 Nm

satelettronica

4.4 - Removing and installing input shaft, output shaft (pinion shaft), differential and selector forks

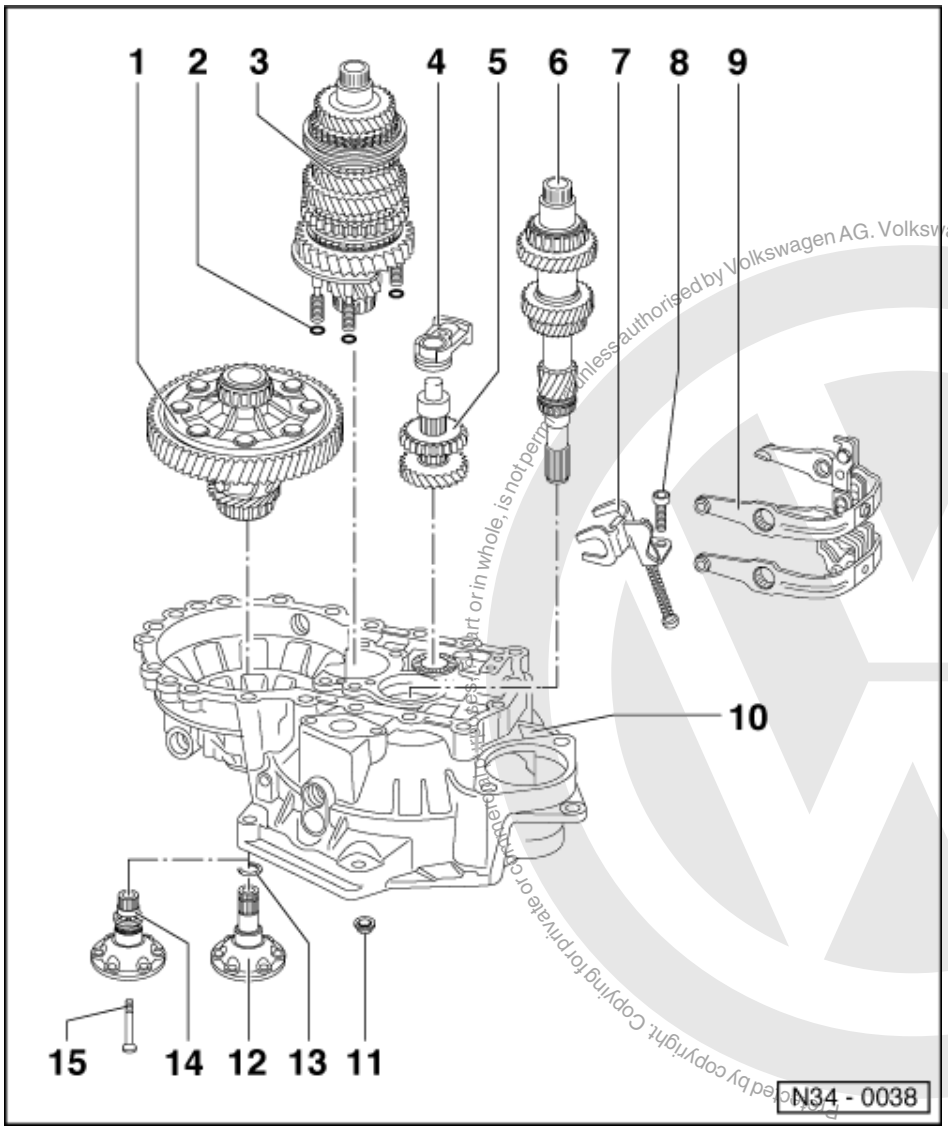

1 Differential
- Dismantling and assembling => Page 157

2 Sealing ring
- Qty. 4
- Always renew

3 Output shaft
- Dismantling and assembling => Page 122

4 Reverse shaft support
- Dismantling and assembling => Page 150

satelettronica

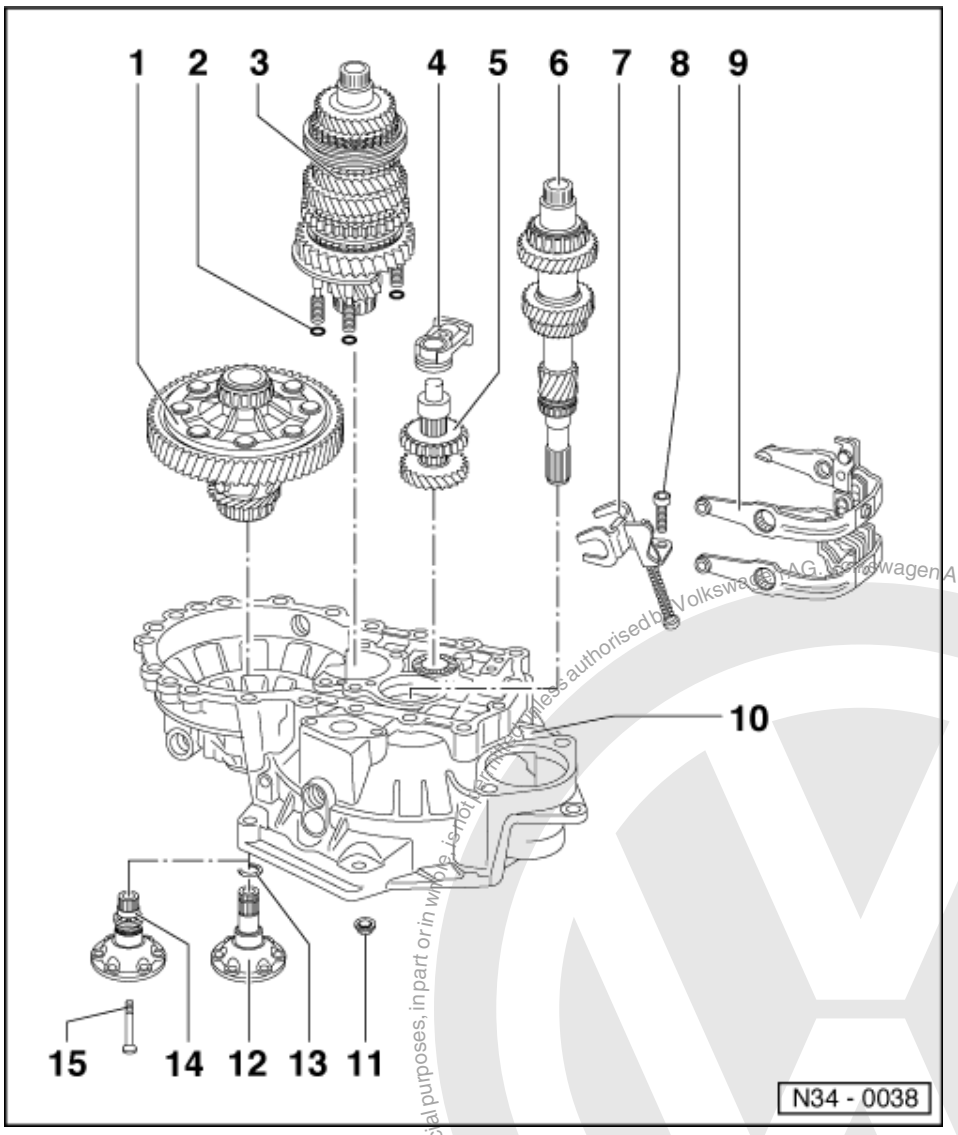

5 Reverse shaft
- Dismantling and assembling => Page 149

6 Input shaft
- Dismantling and assembling => Page 107

7 Selector mechanism
- (Selector forks)
- Dismantling and assembling => Page 101

8 Torx socket head bolt, 25 Nm

9 Reverse gear selector fork
- Dismantling and assembling => Page 101
- Installation position => Page 78

10 Clutch housing
- Servicing => Page 87

Protected by copyright. Copying for private or commercial purposes, in part or in whole, is not permitted unless authorised by Volkswagen AG. Volkswagen AG does not guarantee or accept any liability with respect to the correctness of information in this document. Copyright by Volkswagen AG.
satelettronica

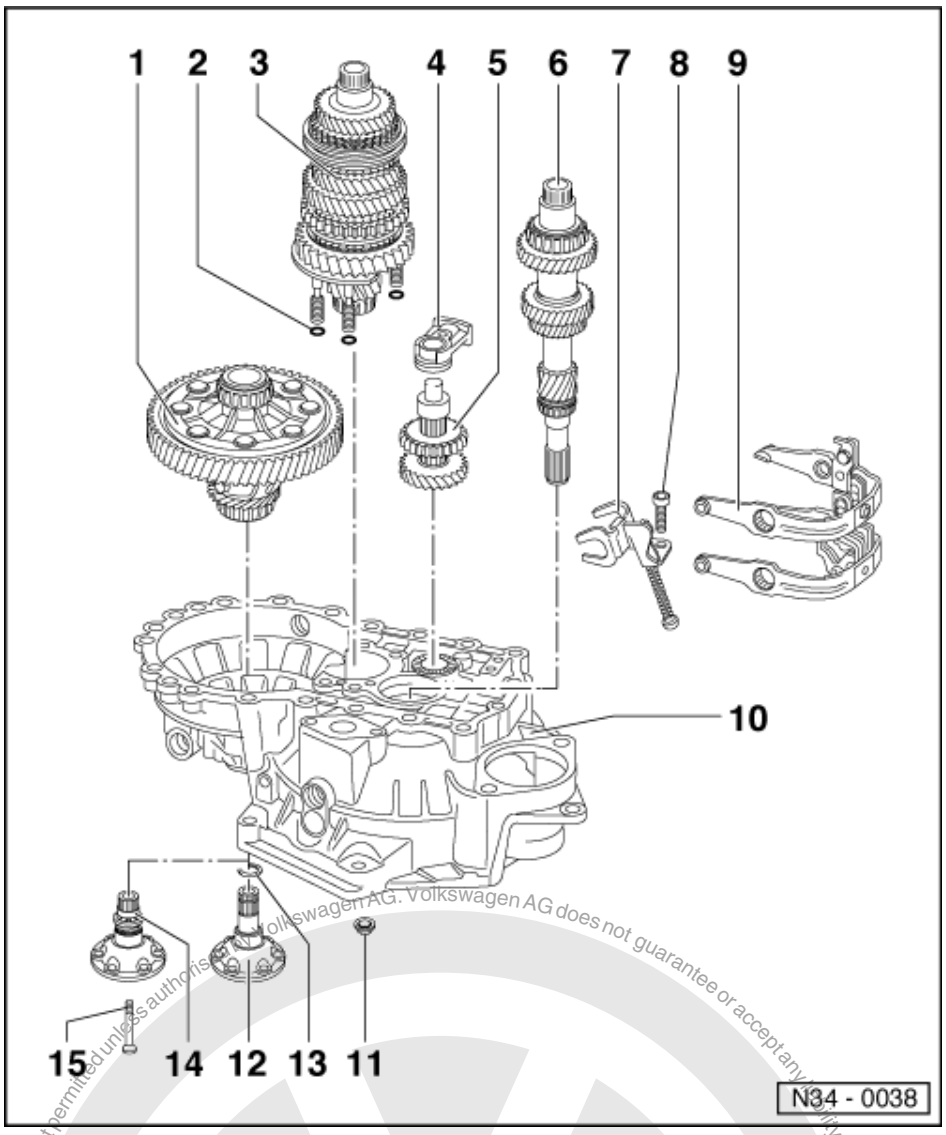

11 Hexagon nut, 25 Nm and then turn 90° further
- 4 nuts for bearing support

12 Flange shaft

13 Circlip
- Always renew
- Removing and installing
  => Page 86

14 Flange shaft with spring
- Complement => Page 165

15 Cone head bolt, 25 Nm
- Installed in gearboxes with springs behind flange shaft

Protected by copyright. Copying for private or commercial purposes, in part or in whole, is not permitted unless authorised by Volkswagen AG. Volkswagen AG does not guarantee or accept any liability with respect to the correctness of information in this document. Copyright by Volkswagen AG.
satelettronica

4.5 - Dismantling and assembling sequence

Dismantling and assembling gearbox housing cover, gearbox housing, selector mechanism, input shaft, output shaft (pinion shaft), differential and selector forks

Special tools, testers and auxiliary items

- Retaining plate VW 309
- Gearbox support VW 353
- Drift VW 295
- Fitting sleeve VW 244 b
- Hot air blower V. A. G. 1416

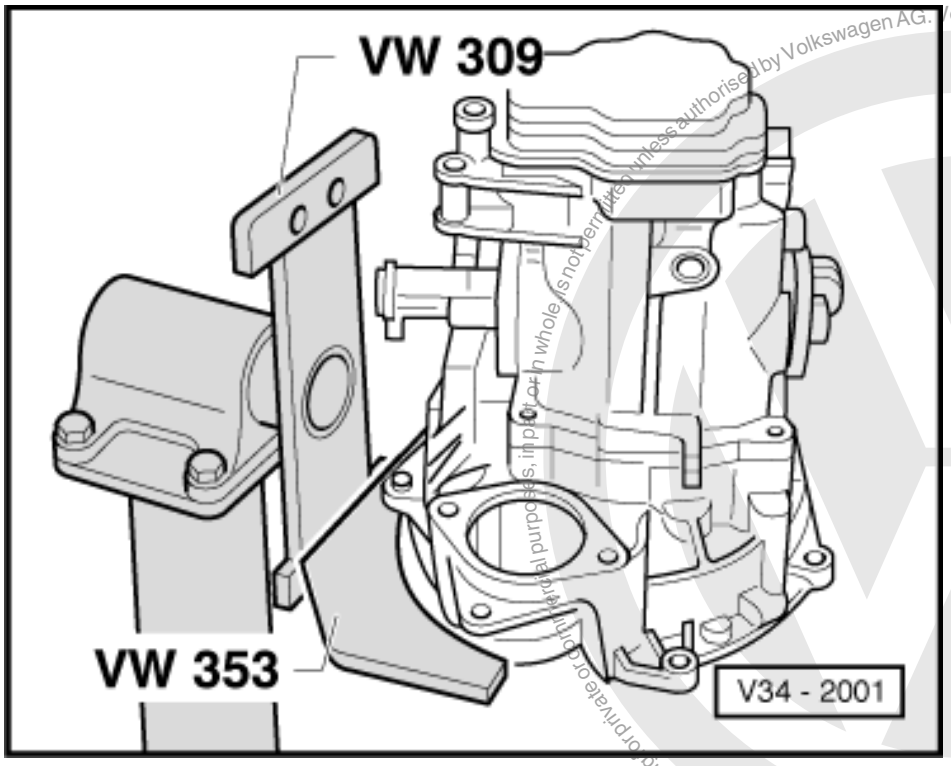

- Stud M 8 x 100 mm
- AMV 188 200 03

Dismantling

- -> Mount gearbox on repair stand.
- Drain gearbox oil.

- Remove clutch release lever and release bearing => Page 19 .

Protected by copyright. Copying for private or commercial purposes, in part or in whole is not permitted unless authorised by Volkswagen AG. Volkswagen AG does not guarantee or accept any liability with respect to the correctness of information in this document. Copyright by Volkswagen AG.
satelettronica

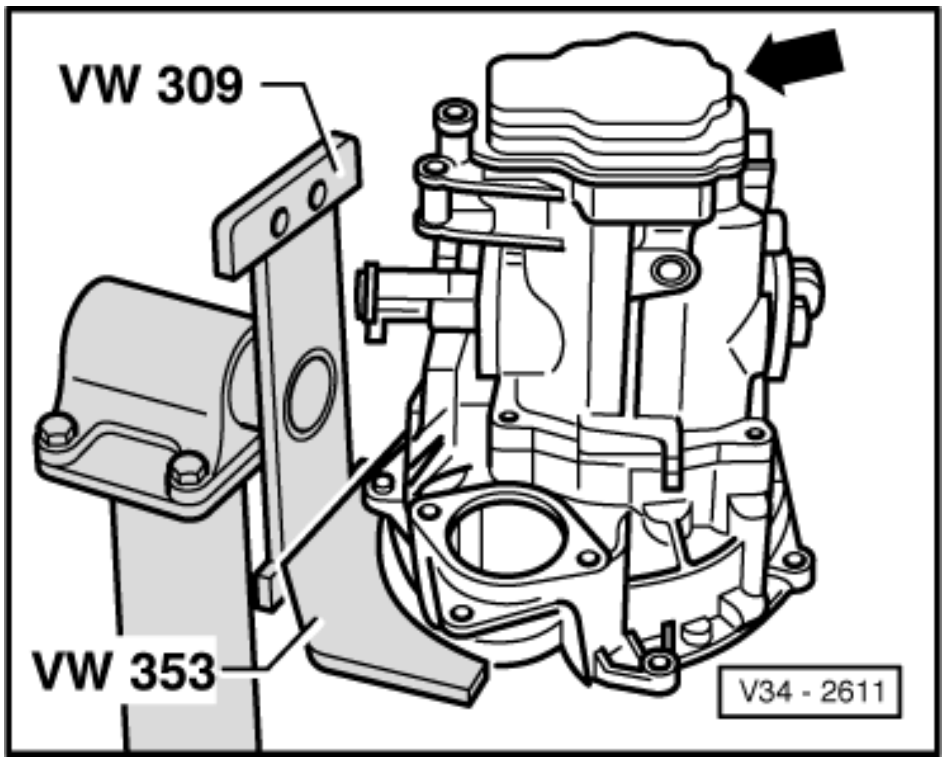

- Remove guide sleeve => Page 19 .
- -> Remove gearbox housing cover (arrow).

- -> Remove 5th gear selector fork (arrow)

Protected by copyright. Copying for private or commercial purposes, in part or in whole, is not permitted unless authorised by Volkswagen AG. Volkswagen AG does not guarantee or accept any liability with respect to the correctness of information in this document. Copyright by Volkswagen AG.
satelettronica

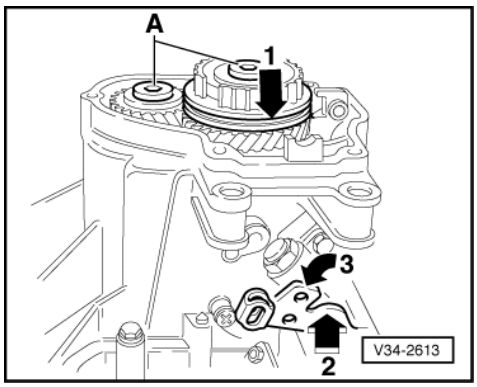

- -> Remove bolts -A- for synchro-hub and 5th gear, to do this select 5th (arrow 1) and 1st gear (arrows 2 and 3).
- After engaging both gears the input shaft and output shaft are locked, synchro-hub and gear wheel cannot turn. Both bolts can now be loosened.

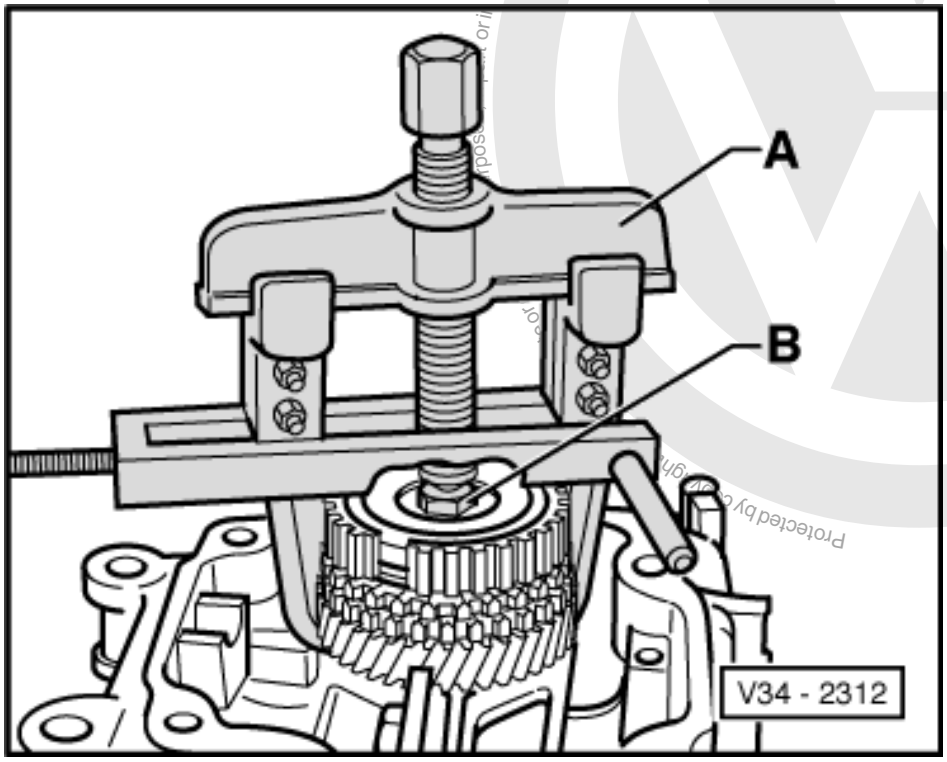

- -> Pull off synchro-hub and 5th gear wheel and remove together with needle roller bearing.

A - Two arm puller e.g. Kukko 20/10 with Matra V/170 hooks.
B - Hexagon bolt M10 x 20

Protected by copyright. Copying for private or commercial purposes, in part or in whole, is not permitted unless authorised by Volkswagen AG. Volkswagen AG does not guarantee or accept any liability with respect to the correctness of information in this document. Copyright by Volkswagen AG.
satelettronica

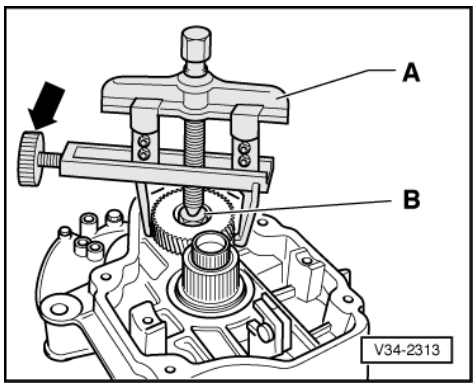

- -> Pull off 5th gear wheel

A - Two arm puller e.g. Kukko 20/10 with Matra V/170 hooks.
B - Hexagon bolt M10 x 20
Sequence for removing:
Fit two arm puller and centralize by turning screw (arrow). Heat gear wheel with hot air blower V.A.G 1416 and pull off.

Note:

When pulling off the gear wheel ensure that the hooks do not bend outwards, if necessary tighten screw (arrow). After 5th gear wheel has been removed check for damage.

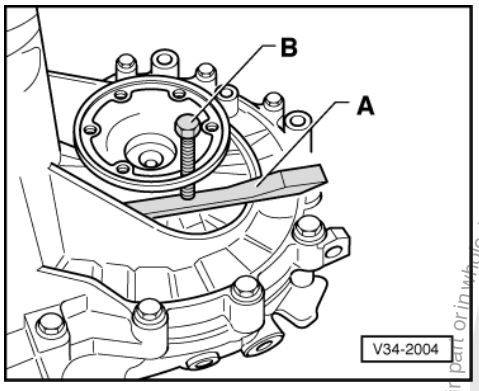

- -> Remove left flange shaft

Gearbox without springs behind flange shafts:

- Place a chisel or distance piece -A- under the flange shaft and pull flange shaft out of the sun wheels by turning bolt -B-

Note:

If when removing the flange shaft it does not come out square, insert a bolt in the opposite hole to assist removal.

Gearbox with springs behind flange shafts:

- Before taking flange shaft out remove cone head bolt.

Protected by copyright. Copying for private or commercial purposes, in part or in whole, is not permitted unless authorised by Volkswagen AG. Volkswagen AG does not guarantee or accept any liability with respect to the correctness of information in this document. Copyright by Volkswagen AG.
satelettronica

- -> Remove both reverse shaft support bracket bolts (arrows).

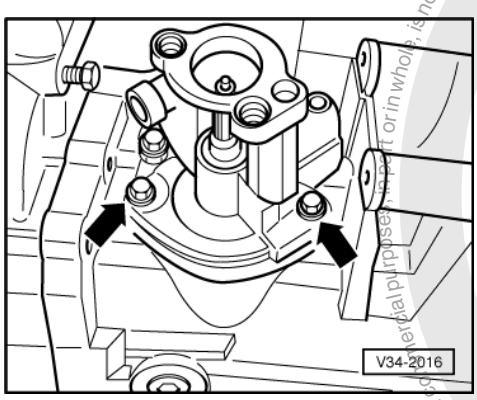

- -> Remove selector shaft with selector mechanism cover, to do this place selector shaft in neutral position. Then remove bolts (arrows) and pull selector shaft out of the gearbox housing.

Protected by copyright. Copying for private or commercial purposes, in part or in whole, is not permitted unless authorised by Volkswagen AG. Volkswagen AG does not guarantee or accept any liability with respect to the correctness of information in this document. Copyright by Volkswagen AG.
satelettronica

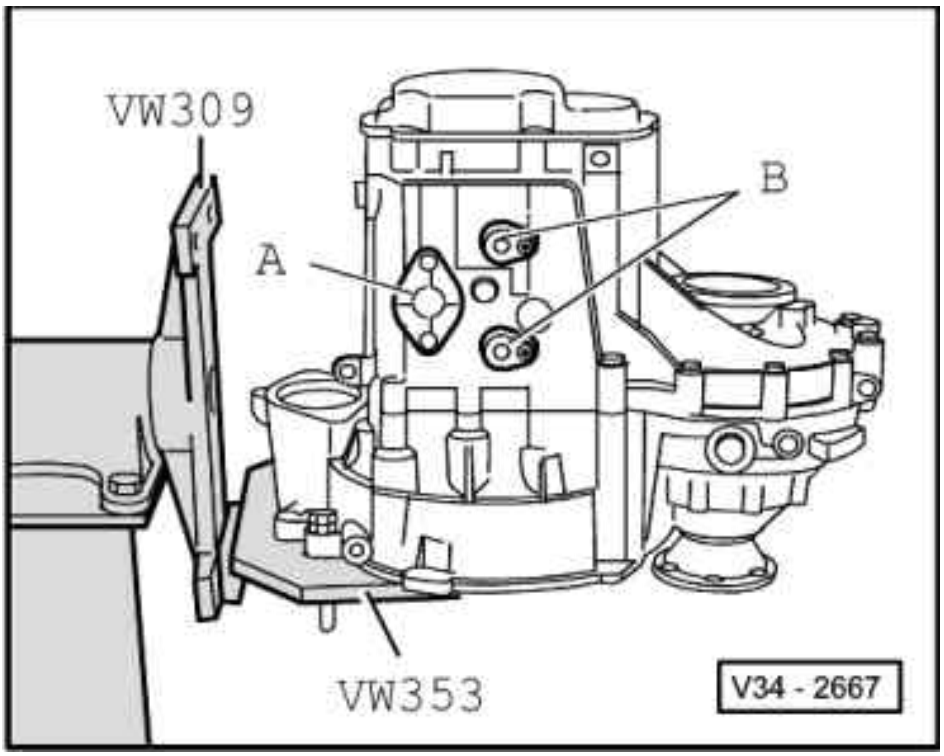

- -> Remove cover plate -A- and pivot pins -B- from underside of gearbox.

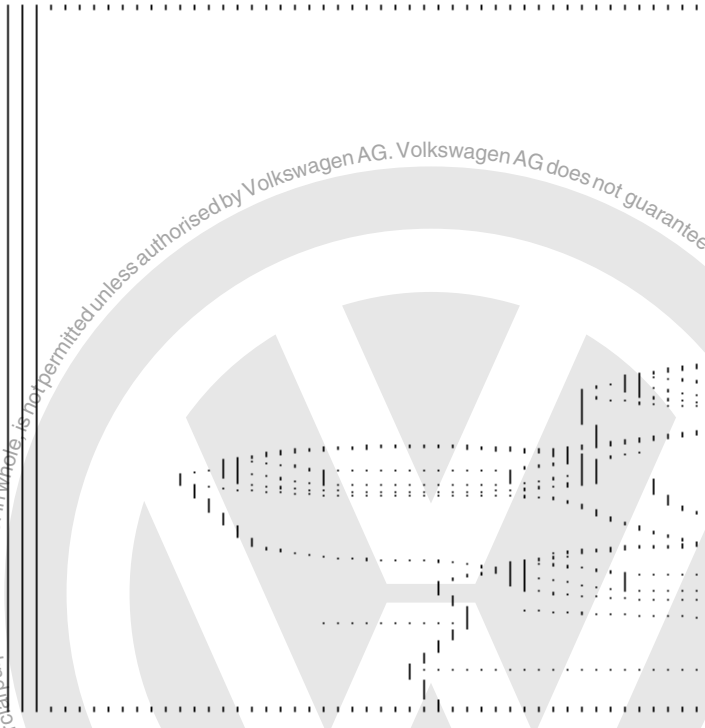

- -> Remove pivot pins -A- on top side of gearbox and gearbox housing to clutch housing securing bolts -B- in area of differential.

Protected by copyright. Copying for private or commercial purposes, in part or in whole, is not permitted unless authorised by Volkswagen AG. Volkswagen AG does not guarantee or accept any liability with respect to the correctness of information in this document. Copyright by Volkswagen AG.

satelettronica

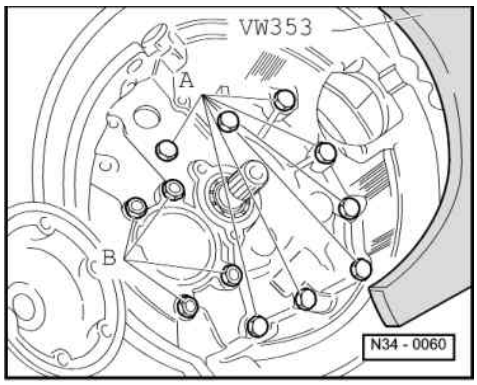

- -> Remove bolts -A-, from inside clutch housing for securing clutch housing to gearbox housing.

Note:

Do not remove nuts -B- for output shaft bearing support.

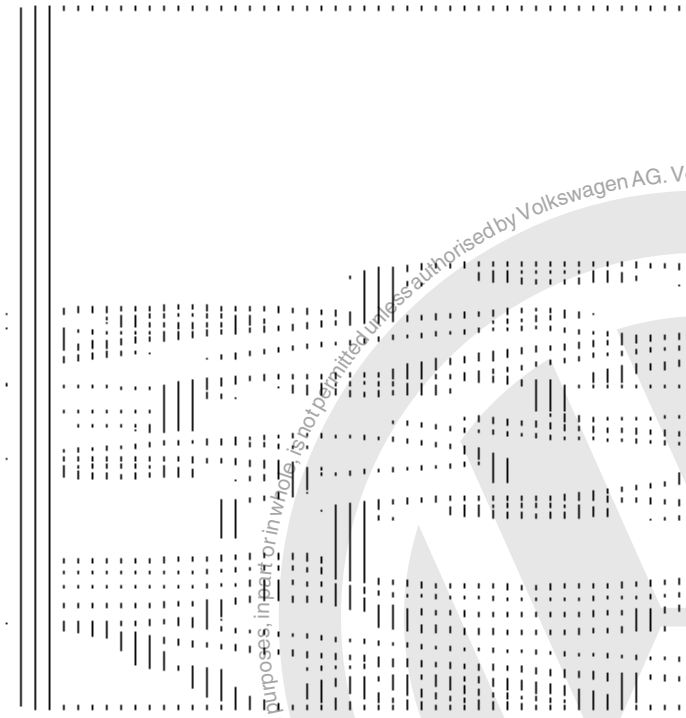

- -> Take-off gearbox housing, if necessary carefully lever up all round and alternating between sides on the protruding housing flange (arrows), being careful not to damage sealing surfaces.

Protected by copyright. Copying for private or commercial purposes, in part or in whole, is not permitted unless authorised by Volkswagen AG. Volkswagen AG does not guarantee or accept any liability with respect to the correctness of information in this document. Copyright by Volkswagen AG.
satelettronica

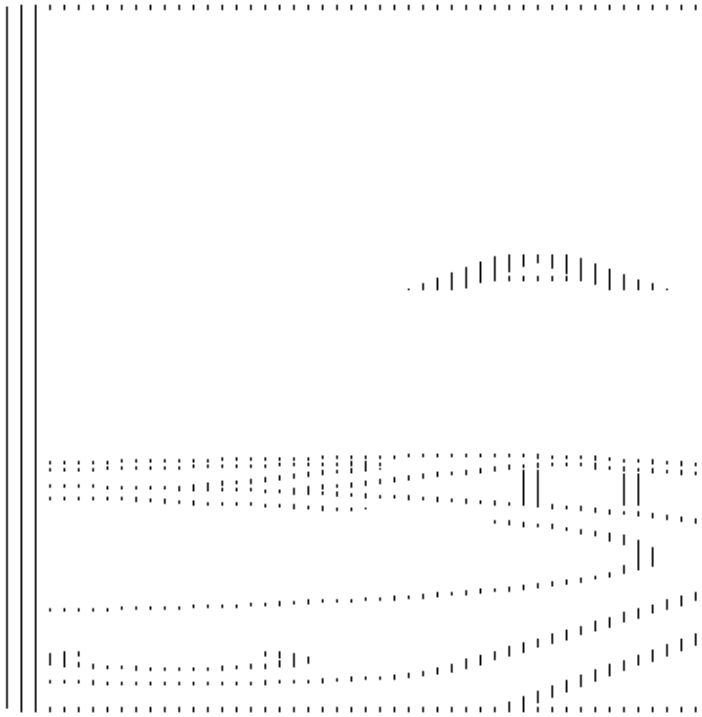

- -> Remove selector forks -A- together with selector plates.
- Unscrew bolt for selector mechanism for reverse gear -B-.

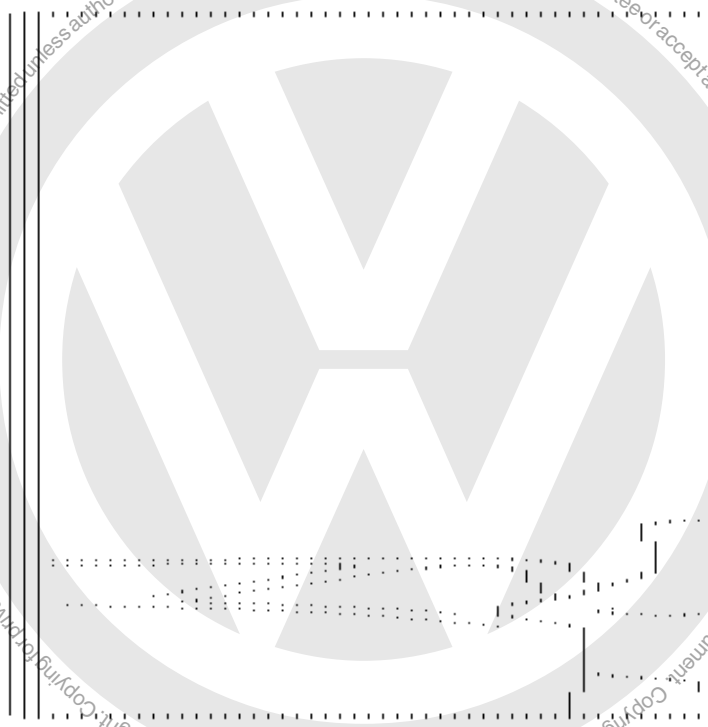

- Remove nuts for output shaft bearing support (=>Item -B-, Illustration N34-0060, Page 76)
- -> Remove reverse gear -A-, input shaft -B- and output shaft -C- one after the other from clutch housing.
- Remove right-hand end flange shaft and differential.

satelettronica

Note:

Removing right-hand flange shaft is identical to left-hand flange shaft =>Page 73 .

Assembling

- Install differential.

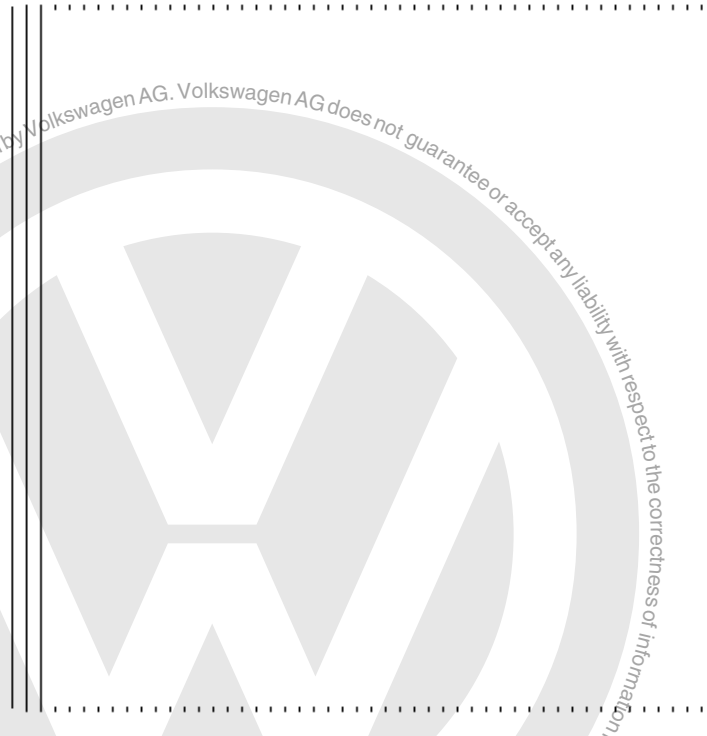

- -> Always renew sealing rings (arrows) for output shaft bearing support.

Note:

The illustration only shows 3 of the 4 sealing rings.

- Install input shaft, output shaft and reverse shaft together.
- Tighten nuts for output shaft bearing support.
- Clean locking fluid remnants from threads in the reverse shaft support (arrow Illustration V34-2293, Page 80). The remnants can be removed using a tap.

Copyright by Volkswagen AG. Volkswagen AG does not guarantee or accept any liability with respect to the correctness of information in this document. Copying for private or commercial purposes, in part or in whole, is not permitted unless authorised by Volkswagen AG.

satelettronica

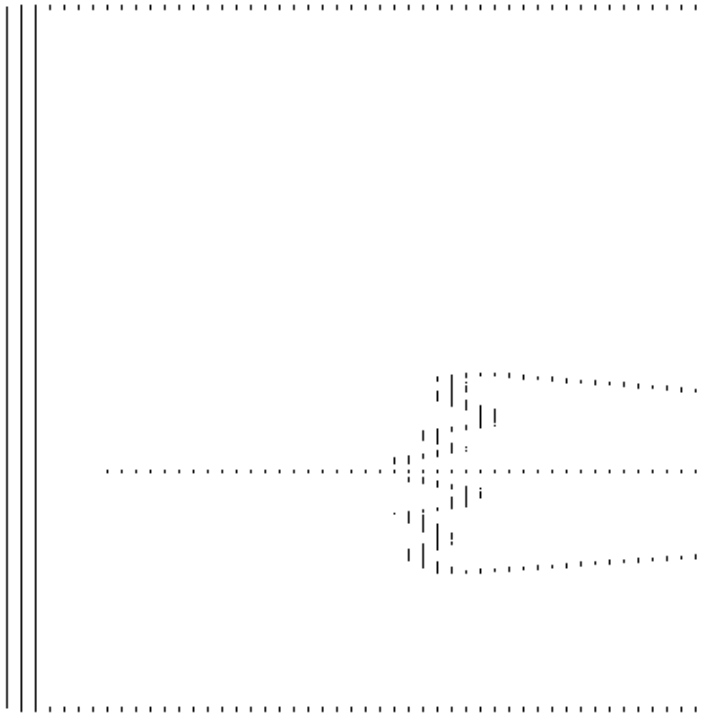

- Install reverse shaft support.
- Install reverse gear selector mechanism.

-> Installation position reverse gear

- Install selector forks together with selector plates.

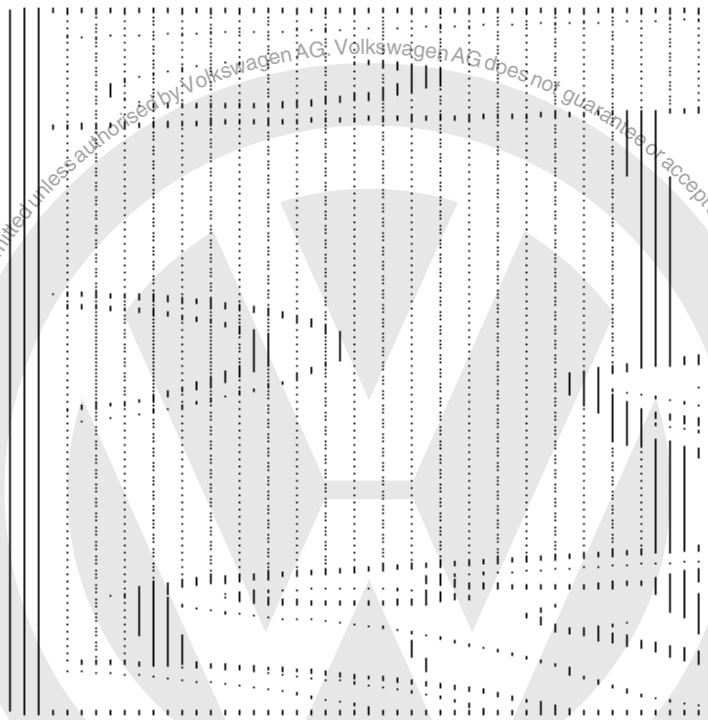

- -> Screw M 8 x 100 mm studs -A- into reverse shaft support so that the shaft is aligned after fitting gearbox housing.

Protected by copyright. Copying for private or commercial purposes, in part or in whole, is not permitted unless authorised by Volkswagen AG. Volkswagen AG does not guarantee or accept any liability with respect to the correctness of information in this document. Copyright by Volkswagen AG.

satelettronica

- Align selector plates.

Note:

The selector segments must be positioned in the grooves on the locking collars.

- Fit gearbox housing.

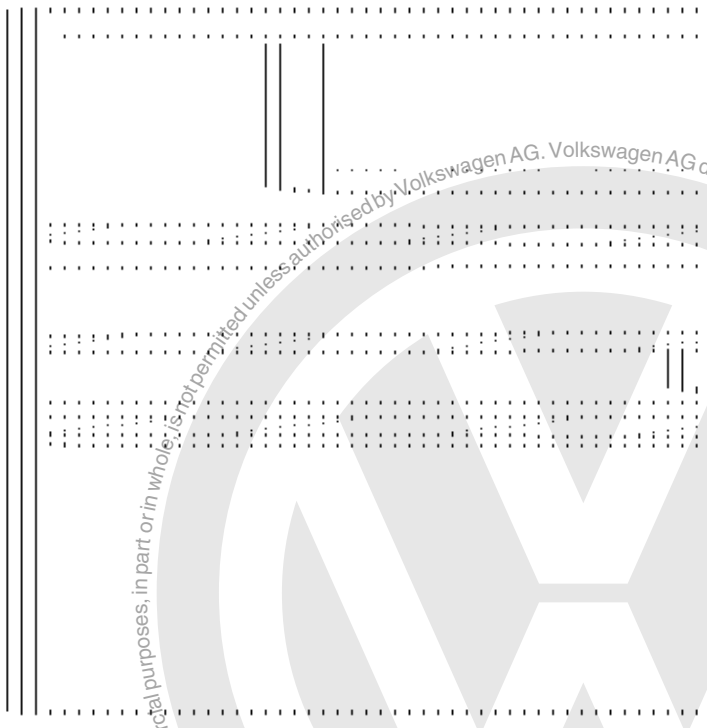

Install reverse shaft support bolts (arrow) as follows:

- -> Insert bolt -a-, remove stud (=> Illustration V34-2008), insert bolt -b- and hand tighten.

  Tightening sequence:
  1 - Bolt -a- 30 Nm
  2 - Bolt -b- 30 Nm

Protected by copyright. Copying for private or commercial purposes, in part or in whole, is not permitted unless authorised by Volkswagen AG. Volkswagen AG does not guarantee or accept any liability with respect to the correctness of information in this document. Copyright by Volkswagen AG.

satelettronica

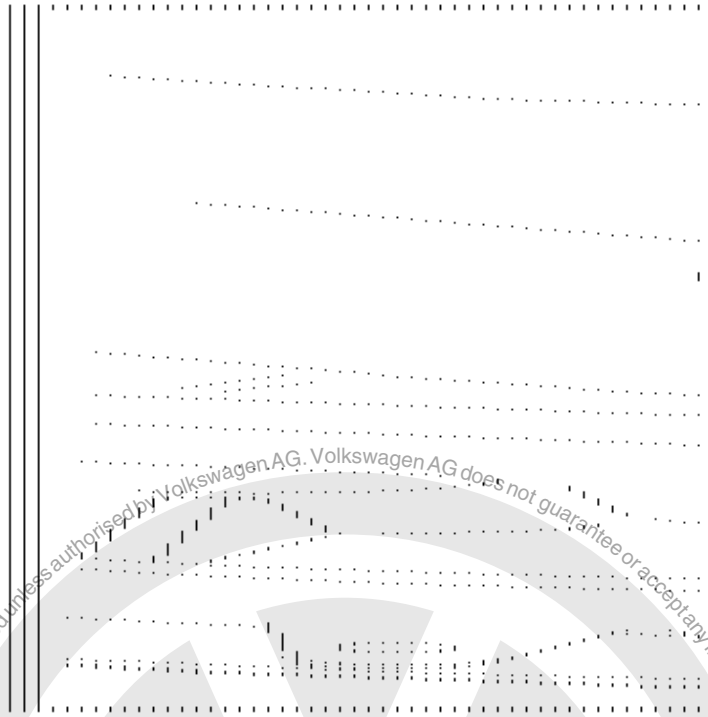

- -> Install pivot pin (arrow) for selector forks. To do this align selector mechanism with a screwdriver, so that the relevant pivot pin can be installed.
- Fit selector shaft cover

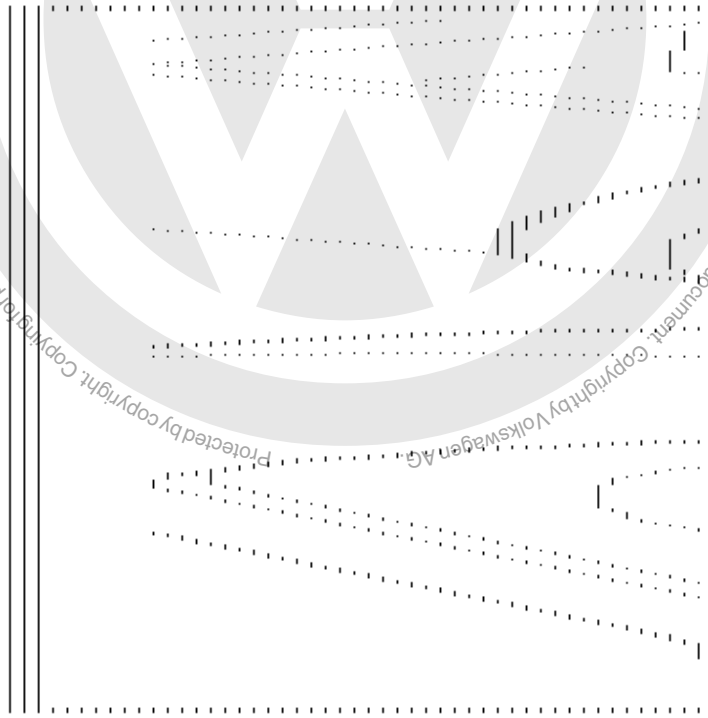

-> Install selector shaft as follows:

- Place selector plates in neutral.
- Locate lug (arrow 1) in the recess in gearbox housing. Position selector shaft so that selector finger (arrow 2) is inserted in the selector plates.

Protected by copyright. Copying for private or commercial purposes, in part or in whole, is not permitted unless authorised by Volkswagen AG. Volkswagen AG does not guarantee or accept any liability with respect to the correctness of information in this document. Copyright by Volkswagen AG.

satelettronica

- Install selector shaft cover.

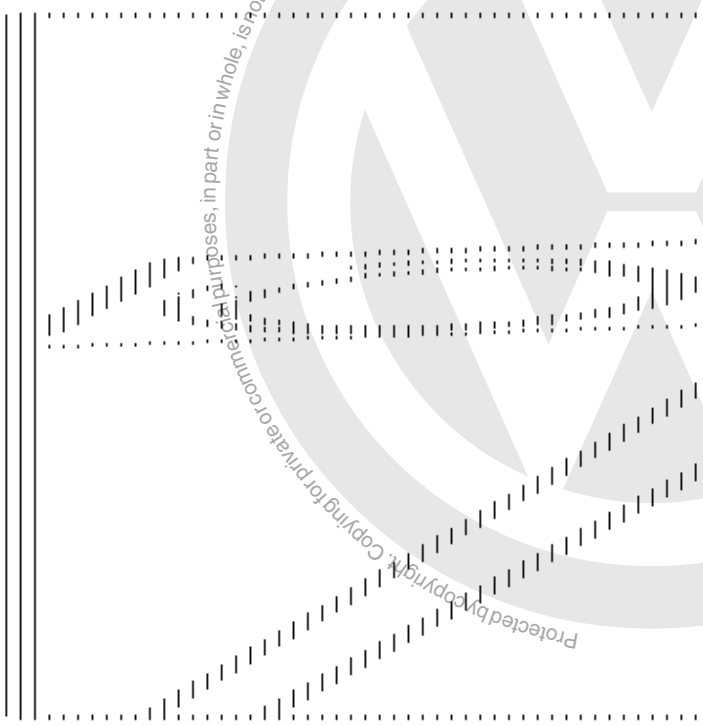

-> Installation position 5th gear wheel

The circumferential groove (arrow) faces to gearbox housing.

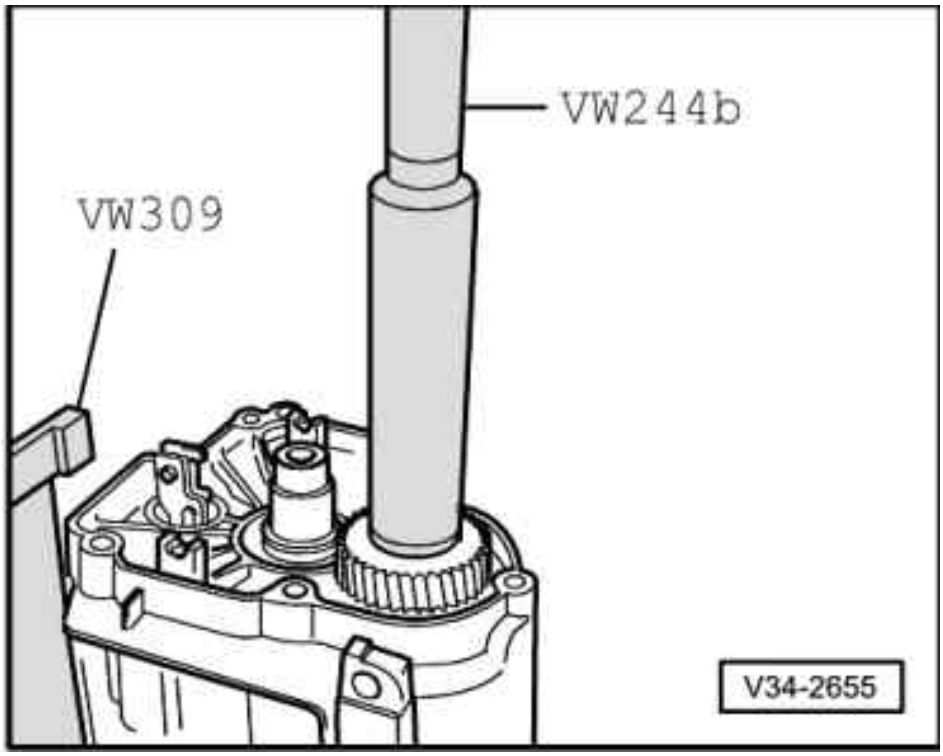

- -> Knock-on 5th gear wheel.

Protected by copyright. Copying for private or commercial purposes, in part or in whole, is not permitted unless authorised by Volkswagen AG. Volkswagen AG does not guarantee or accept any liability with respect to the correctness of information in this document. Copyright by Volkswagen AG.
satelettronica

Checking 5th gear synchro-ring

- -> Before installing 5th gear wheel and synchro-ring press the synchro-ring onto the cone of the gear wheel and measure gap -a- with a feeler gauge.

Gap -a-	New	Wear limit
5th gear	1.1 ... 1.7 mm	0.5 mm

- Install 5th gear wheel with needle roller bearing
- Place 5th gear synchro-ring on gear wheel
- Assembly 5th gear synchro-hub/locking collar before installing => Page 118 .

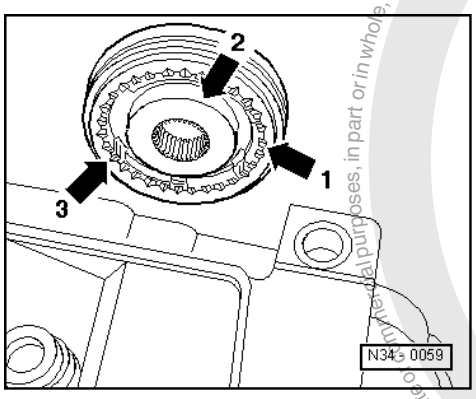

-> Installation position 5th gear synchro-hub/locking collar

The pointed teeth of the locking collar (arrow 1) and the high shoulder of the synchro-hub (arrow 2) face the gearbox housing.

Protected by copyright. Copying for private or commercial purposes, in part or in whole, is not permitted unless authorised by Volkswagen AG. Volkswagen AG does not guarantee or accept any liability with respect to the correctness of information in this document. Copyright by Volkswagen AG.
satelettronica

The syncro-hub mountings (arrow 3) align with the synchro-ring cast locking pieces (=>arrows on Illustration N35-0018, Page 84).

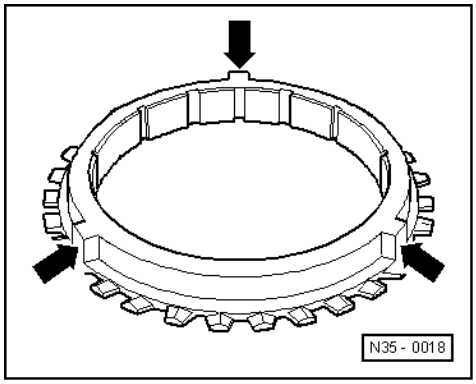

-> 5th gear synchro-ring with cast locking pieces (arrows)

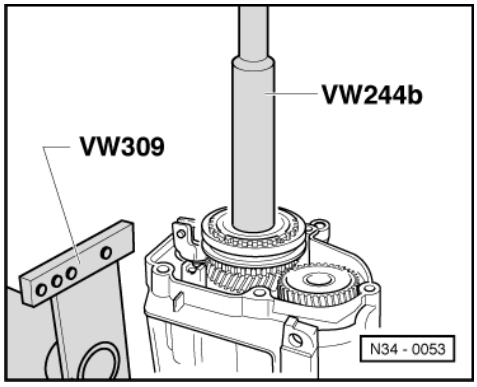

- -> Knock-on 5th gear synchro-hub

Note:

When driving on ensure synchro-ring is free to move.

Protected by copyright. Copying for private or commercial purposes, in part or in whole, is not permitted unless authorised by Volkswagen AG. Volkswagen AG does not guarantee or accept any liability with respect to the correctness of information in this document. Copyright by Volkswagen AG.
satelettronica

- Screw-in securing bolts for synchro-hub and 5th gear wheel.

-> Installation position of dished spring for gear wheel and 5th gear synchro-hub securing bolts:

The outer diameter (concave side -arrows-) faces 5th gear.

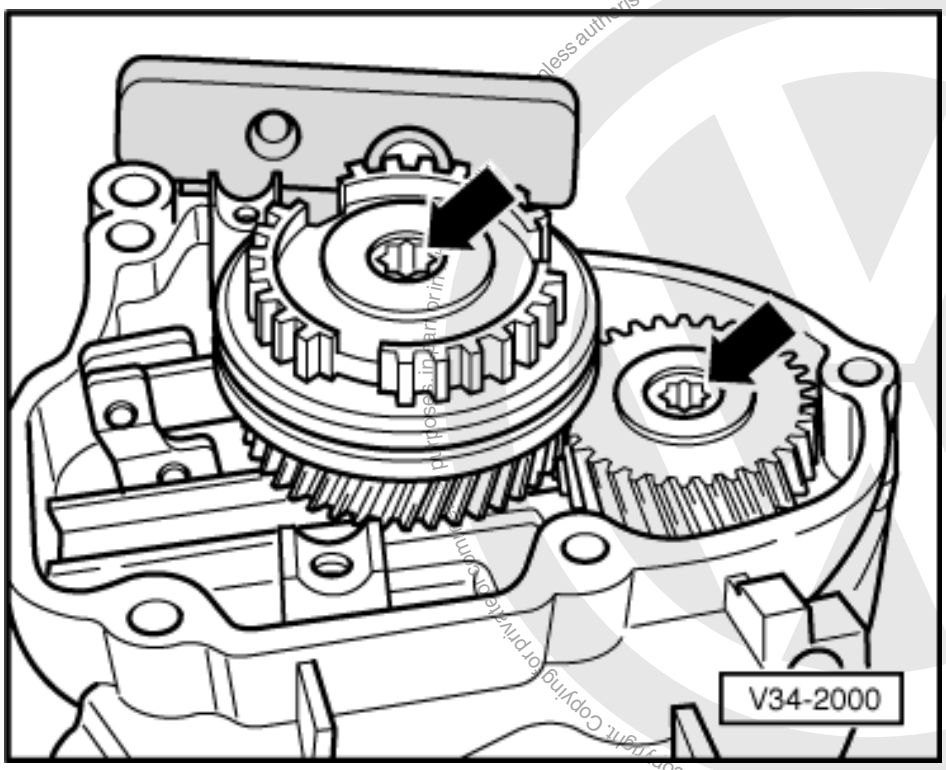

- -> Engage two gears before tightening 5th gear synchro-hub and gear wheel securing bolts (arrows) (=>Illustration 34-2613, Page 72)
- Install 5th gear selector fork.

satelettronica

-> Adjusting 5th gear:

- Engage 5th gear. Loosen bolt -1-. Press locking collar and selector fork jaws in direction of arrow, then tighten bolt -1- to 25 Nm.

• Check measurement :
It must not be possible to slide a 0.2 mm feeler gauge between locking collar and gear wheel. If necessary repeat adjustment.

- Disengage 5th gear. Locking collar must now be in the neutral position. Synchro-ring must move freely.
- Fit gearbox housing cover

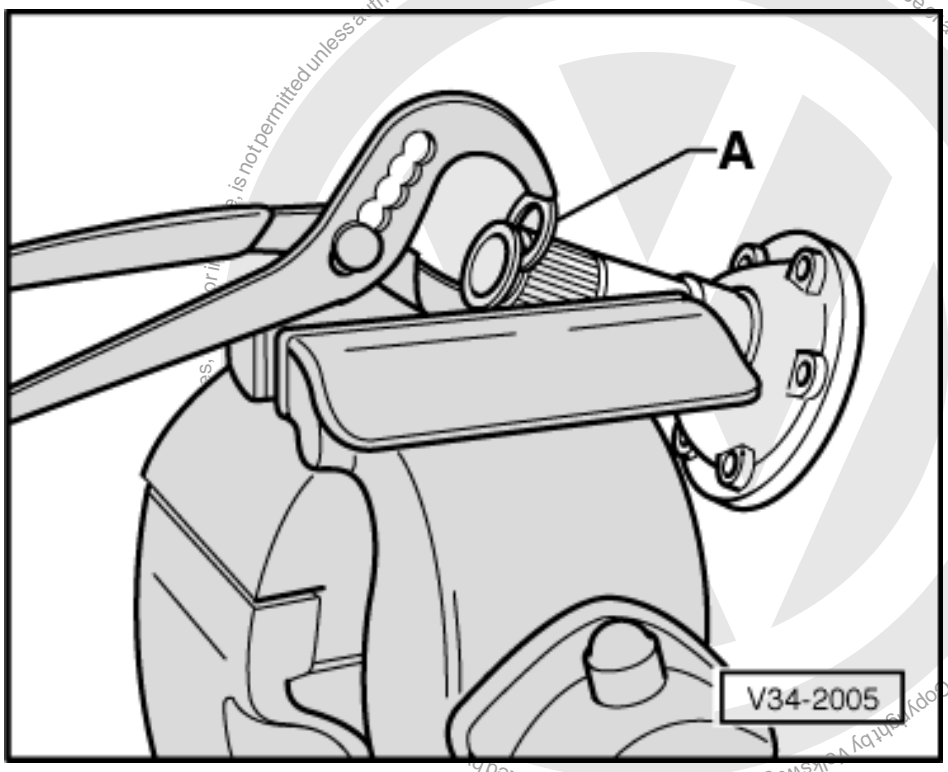

Gearbox without spring behind flange shafts:

- -> Replacing flange shaft circlip. Clamp flange shaft using vice clamps, in vice. Press old circlip out of flange shaft groove with new circlip -A-.
- Drive in flange shaft with e.g. drift VW 295.

Gearbox with springs behind flange shafts:

- Installing complete flange shaft => Page 64

- Fit release bearing guide sleeve => Page 19 .
- Fit clutch release lever and release bearing => Page 19 .

Protected by Volkswagen AG. Volkswagen AG does not guarantee or accept any liability with respect to the correctness of information in this document. Copyright by Volkswagen AG. Protected by Volkswagen AG. Copyright by Volkswagen AG. is not permitted unless authorised by Volkswagen AG. Volkswagen AG does not guarantee or accept any liability with respect to the correctness of information in this document. Copyright by Volkswagen AG.

satelettronica

5 - Servicing gearbox housing and clutch housing

5.1 - Servicing gearbox housing and clutch housing

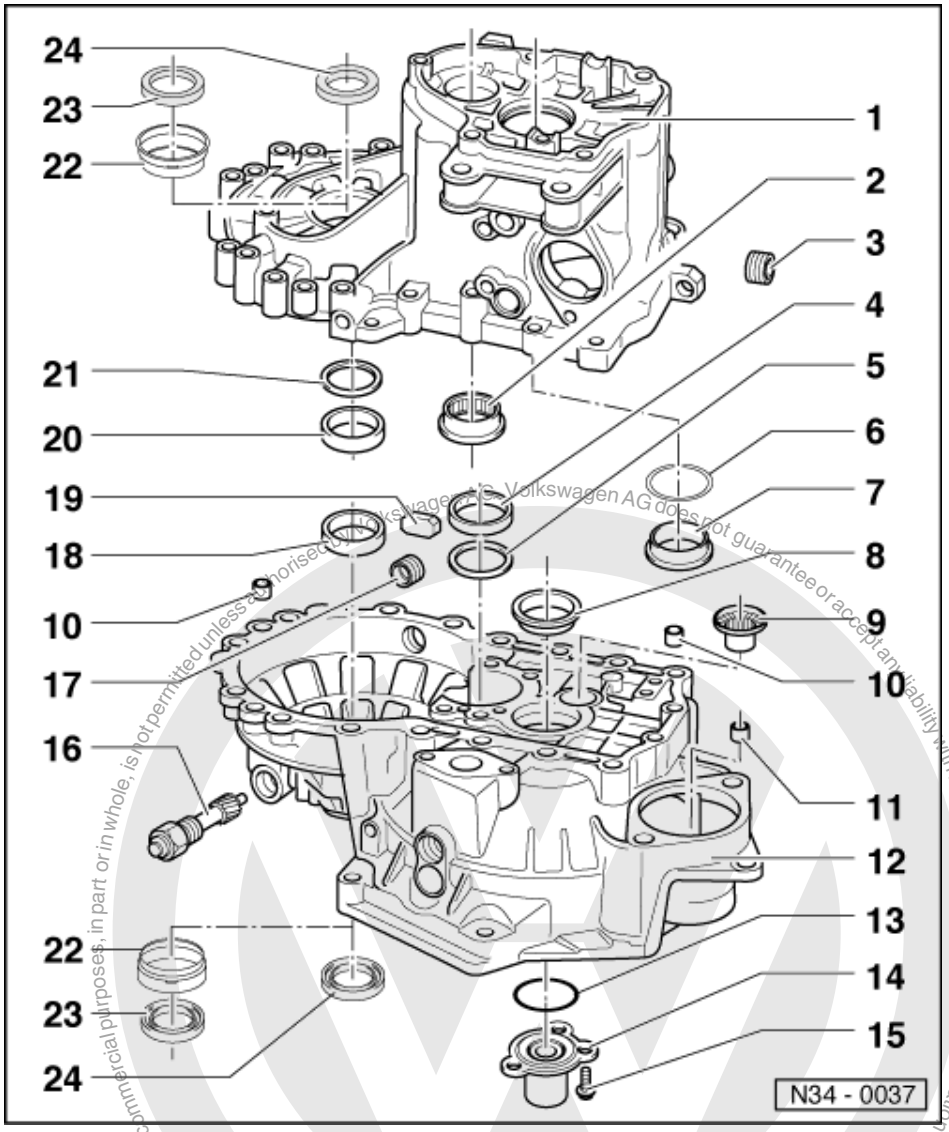

1 Gearbox housing
- If replaced: Adjust input shaft and differential => Page 173

2 Needle roller bearing
- For output shaft
- Removing => Fig. 1
- Installing and securing => Fig. 2

3 Oil filler plug, 25 Nm
- Without magnet

4 Outer race/taper roller bearing
- For output shaft
- Removing and installing => Page 132
- If replaced: Adjust output shaft => Page 146

satelettronica

Protected by copyright. Copying for private or commercial purposes, in part or in whole, is not permitted unless authorised by Volkswagen AG. Volkswagen AG does not guarantee or accept any liability with respect to the correctness of information in this document. Copyright by Volkswagen AG.

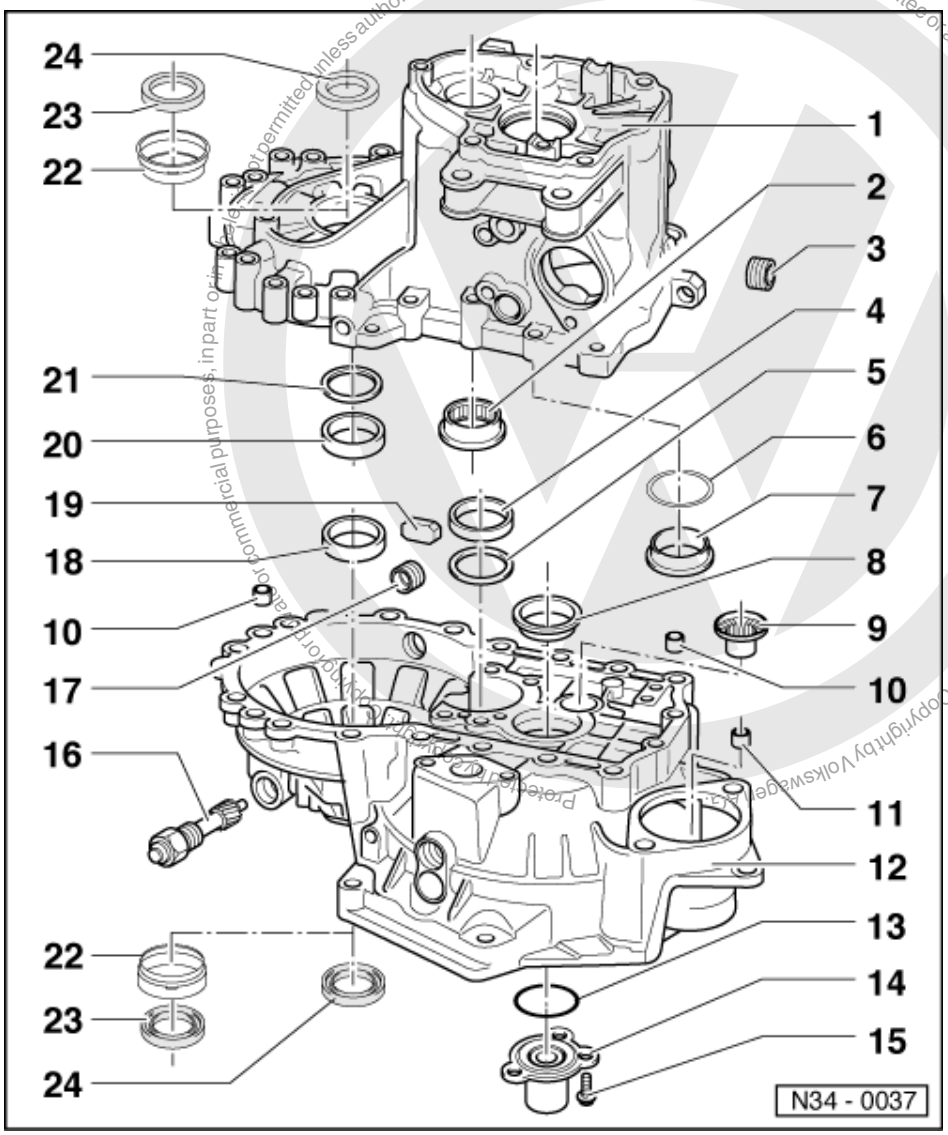

5 Shim
- For output shaft
- Adjustment overview
  => Page 173

6 Shim
- For input shaft
- Adjustment overview
  => Page 173

7 Outer race/taper roller bearing
- For input shaft
- Removing and installing
  => Page 112
- If replaced: Adjust input shaft
  => Page 118

8 Outer race/taper roller bearing
- For input shaft
- Removing and installing
  => Page 116

satelettronica

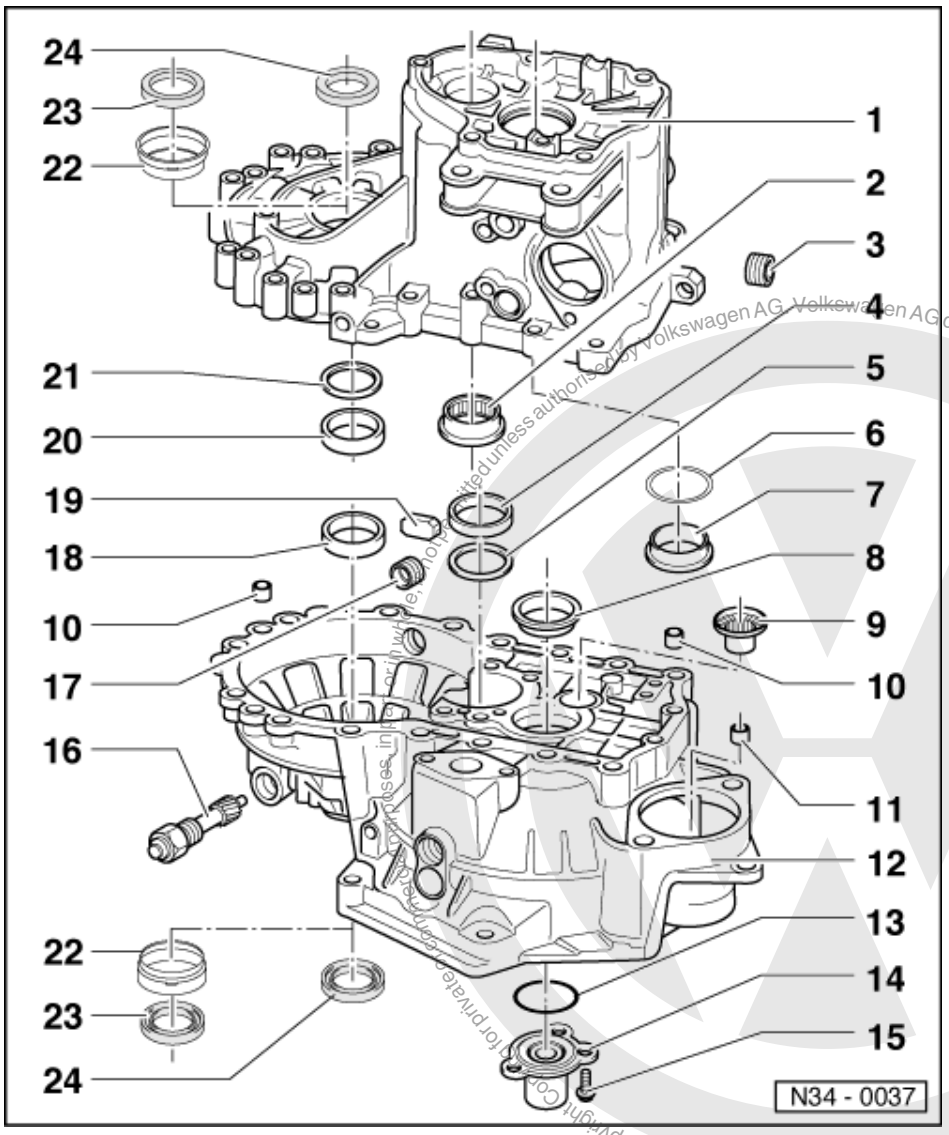

9 Needle bearing
- Removing and installing
  => Page 151

10 Dowel sleeve
- (Qty. 2)

11 Starter bush
- Pulling out => Fig. 5
- Knocking in => Fig. 6
- Can be replaced without removing gearbox

12 Clutch housing
- If replaced: =>Adjustment overview, Page 173

satelettronica

Volkswagen AG. Volkswagen AG does not guarantee or accept any liability with respect to the correctness of information in this document. Copyright by Volkswagen AG.

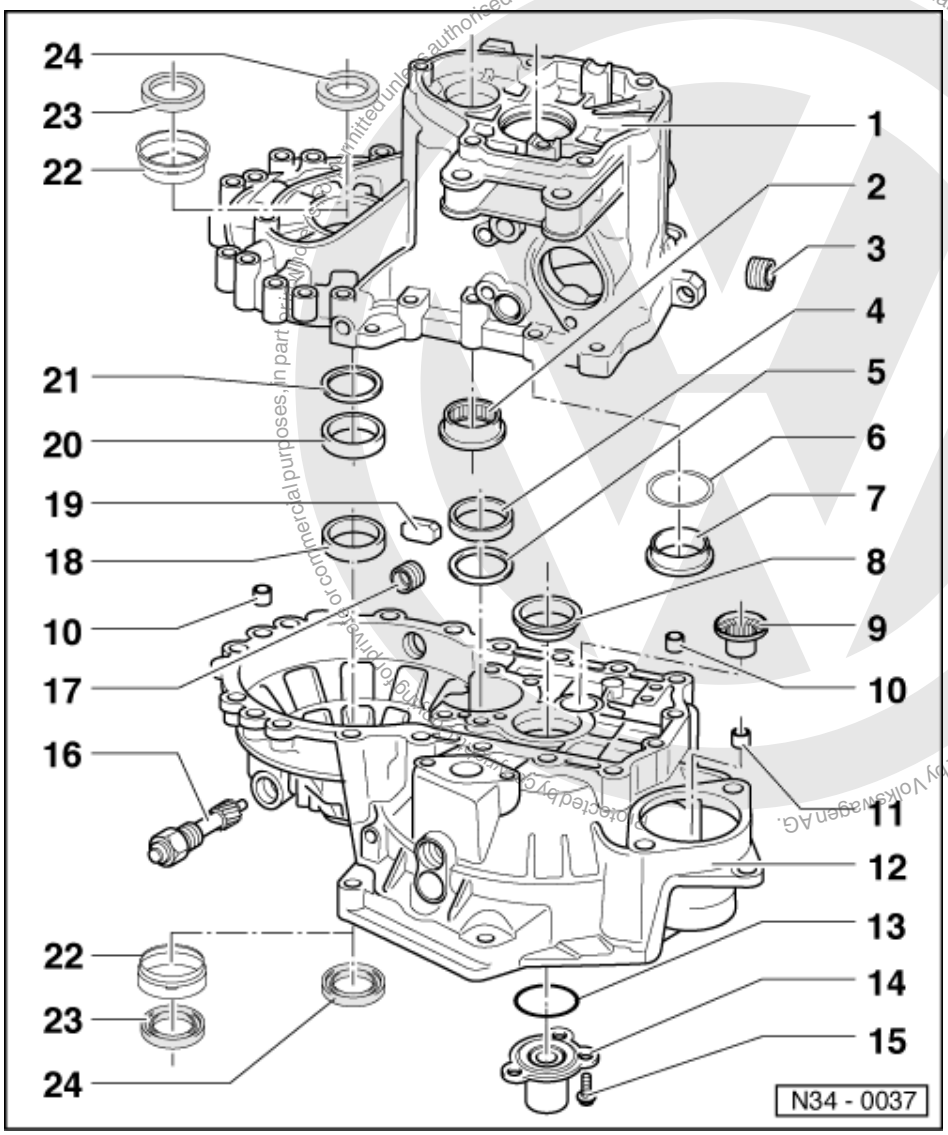

13 O-ring
- Always renew
- Place on guide sleeve and apply multi-purpose grease

14 Guide sleeve
- With oil seal
- Knocking-out oil seal => Fig. 3
- Knocking-in oil seal => Fig. 4
- Remove guide sleeve to change the oil seal

15 Socket head bolt, 20 Nm
- Self-locking
- Always renew

16 Speedometer drive, 30 Nm

17 Oil drain plug, 25 Nm
- Without magnet

satelettronica

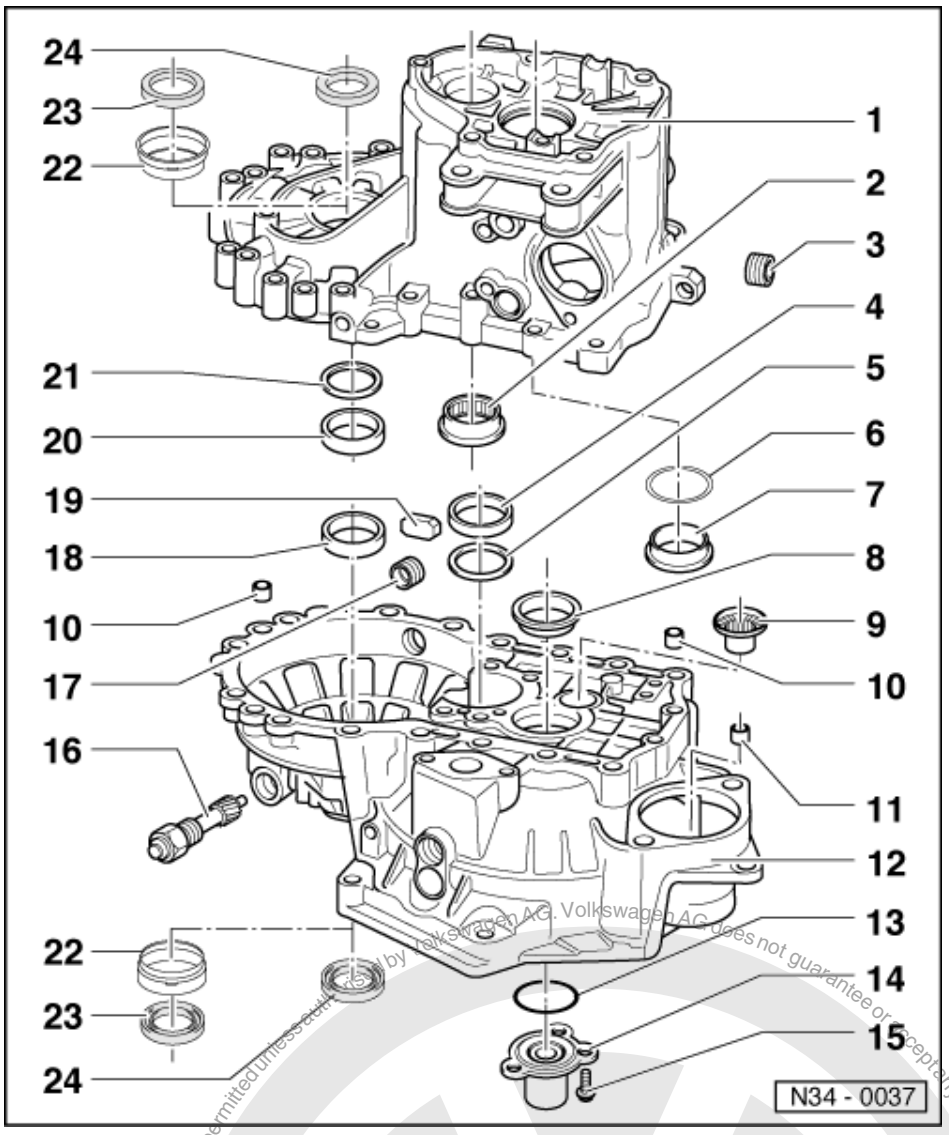

18 Outer race/taper roller bearing

- For differential
- Removing and installing
  => from Page 157
- If replaced: Adjust differential
  => Page 173

19 Magnet

- Held in place by housing joint surface

20 Outer race/taper roller bearing

- For differential
- Driving in and out
  => Page 157
- If replaced: Adjust differential
  => Page 173

21 Shim

- For differential
- Adjustment overview
  => Page 173

satelettronica
Protected by copyright. Copying for private or commercial purposes, in part or in whole, is not permitted unless authorised by Volkswagen AG. Volkswagen AG does not guarantee or accept any liability with respect to the correctness of information in this document. Copyright by Volkswagen AG.

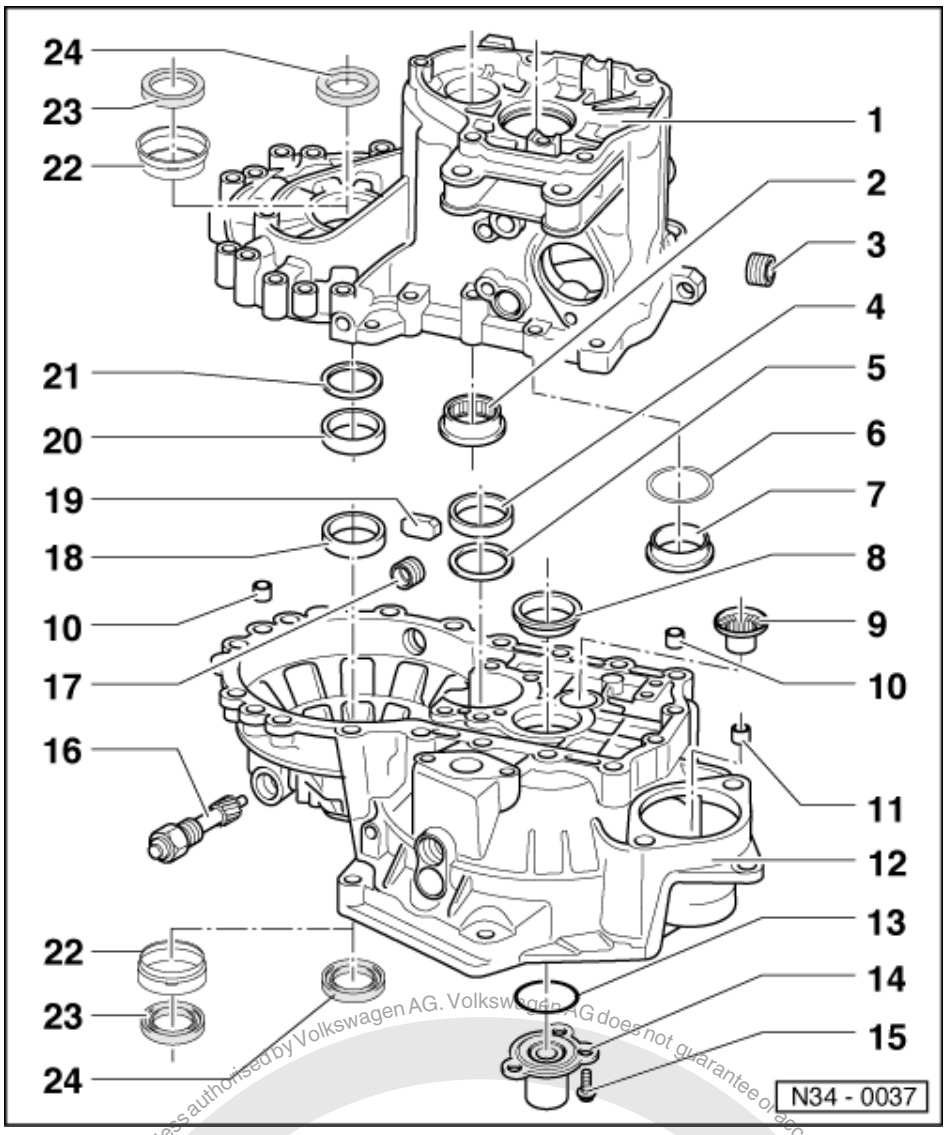

22 Sleeve

- For oil seal (Item 23)
- Installed in gearboxes with springs behind flange shafts
- Removing => Fig. 7
- Installing => Fig. 8

23 Oil seal

- For gearboxes with springs behind flange shafts
- Renewing => Page 154

24 Oil seal

- For gearboxes without springs behind flange shafts
- Renewing => Page 153

Protected by copyright. Copying for private or commercial purposes, in part or in whole, is not permitted unless authorised by Volkswagen AG. Volkswagen AG does not guarantee or accept any liability with respect to the correctness of information in this document. Copyright by Volkswagen AG.

satelettronica

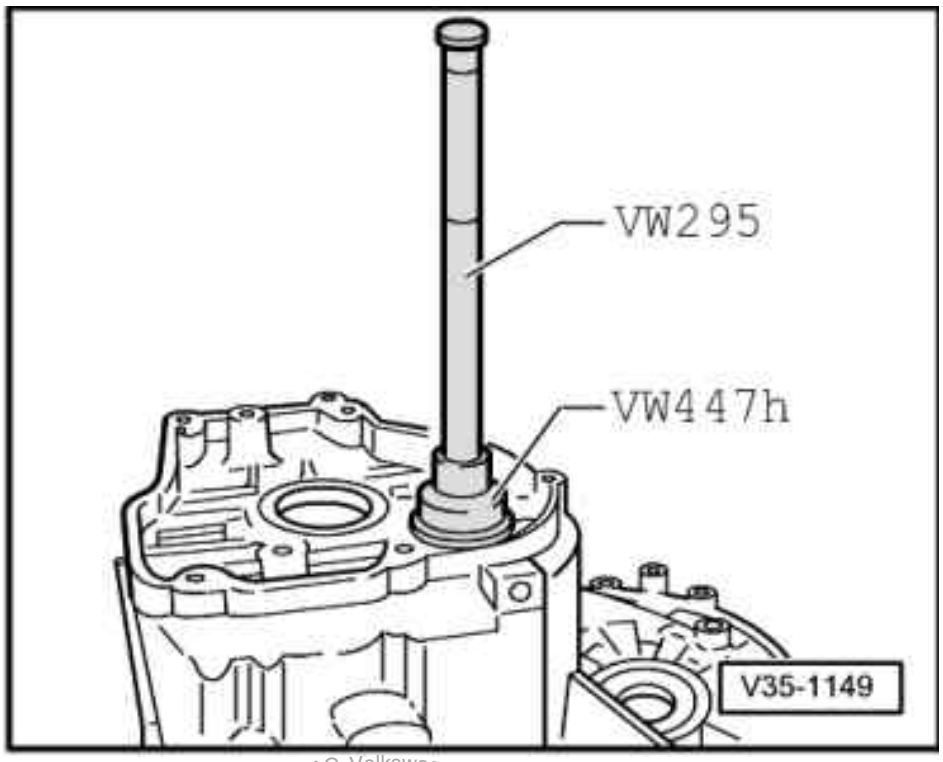

-> Fig.1 Knocking-out needle roller bearing.

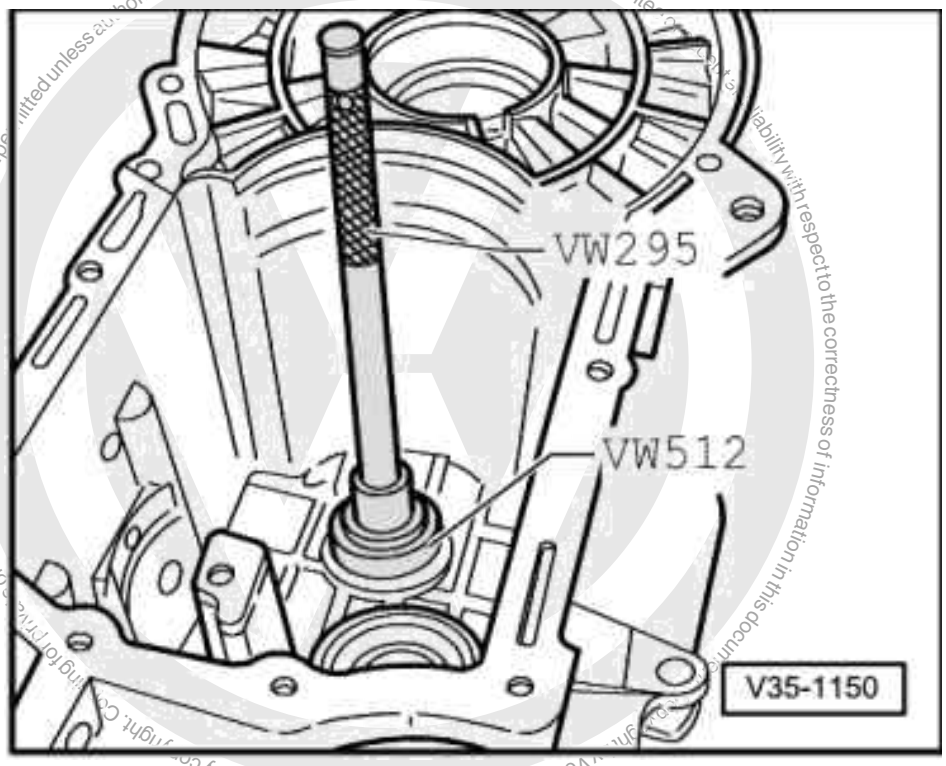

-> Fig.2 Knocking needle roller bearing in onto stop

- Secure needle roller bearing in gearbox housing at three points (120° offset) with a punch.

satelettronica

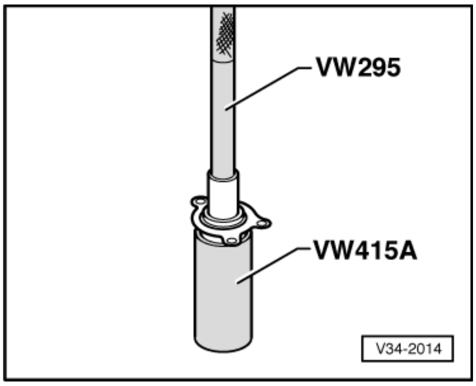

-> Fig.3 Knocking oil seal out of guide sleeve.

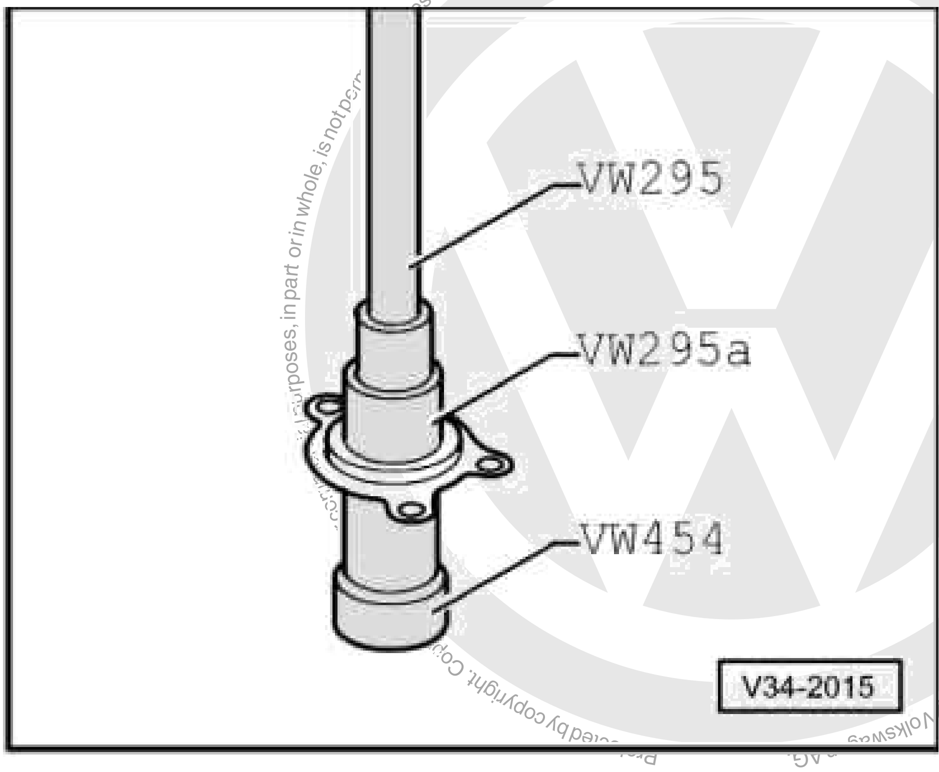

-> Fig.4 Knock oil seal into the guide sleeve onto stop.

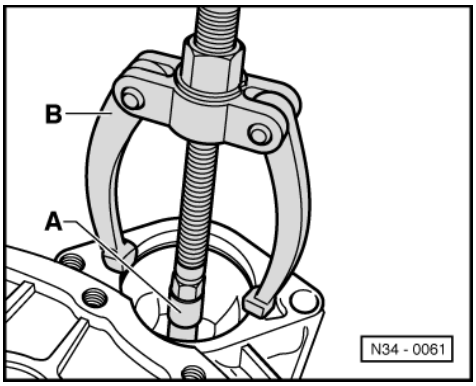

Protected by copyright. Copying for private or commercial purposes, in part or in whole, is not permitted unless authorised by Volkswagen AG. Volkswagen AG does not guarantee or accept any liability with respect to the correctness of information in this document. Copyright by Volkswagen AG.

satelettronica

-> Fig.5 Pulling out starter bush.

A - Internal extractor, e.g. Kukko 21/2, 14.5 ... 18.5 mm

B - Counter support. e.g. Kukko 22/1

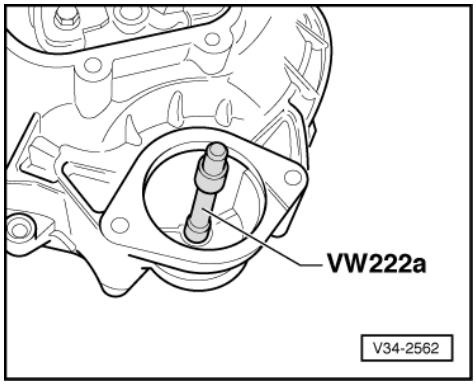

-> Fig.6 Knocking in starter bush.

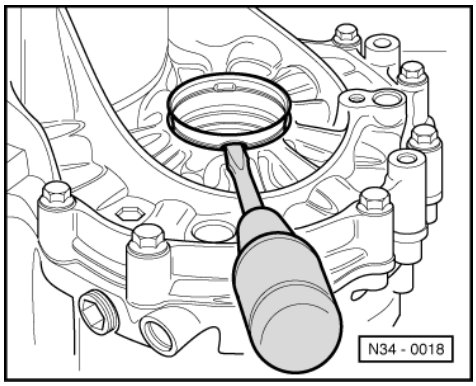

-> Fig.7 Lever out sleeve with screwdriver

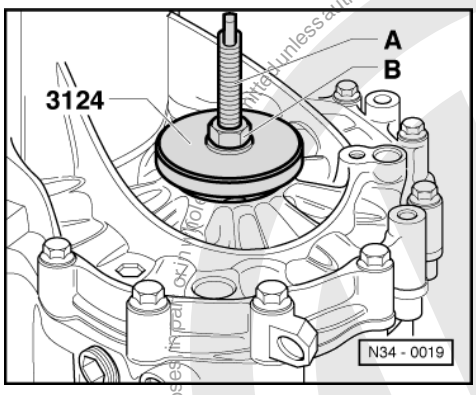

-> Fig.8 Pulling sleeve in

A - Screw threaded rod from assembly device 3066 into differential threaded piece B - Nut M12 with washer

- Pull sleeve in onto stop with thrust piece 3124 by turning on nut -B-.

satelettronica
Protected by copyright. Copying for private or commercial purposes, in part or in whole, is not permitted unless authorised by Volkswagen AG. Volkswagen AG does not guarantee or accept any liability with respect to the correctness of information in this document. Copyright by Volkswagen AG.

Note:

When gearbox is dismantled press sleeve in with thrust piece 3124 onto stop.

6 - Dismantling and assembling gearbox selector mechanism

6.1 - Dismantling and assembling gearbox selector mechanism

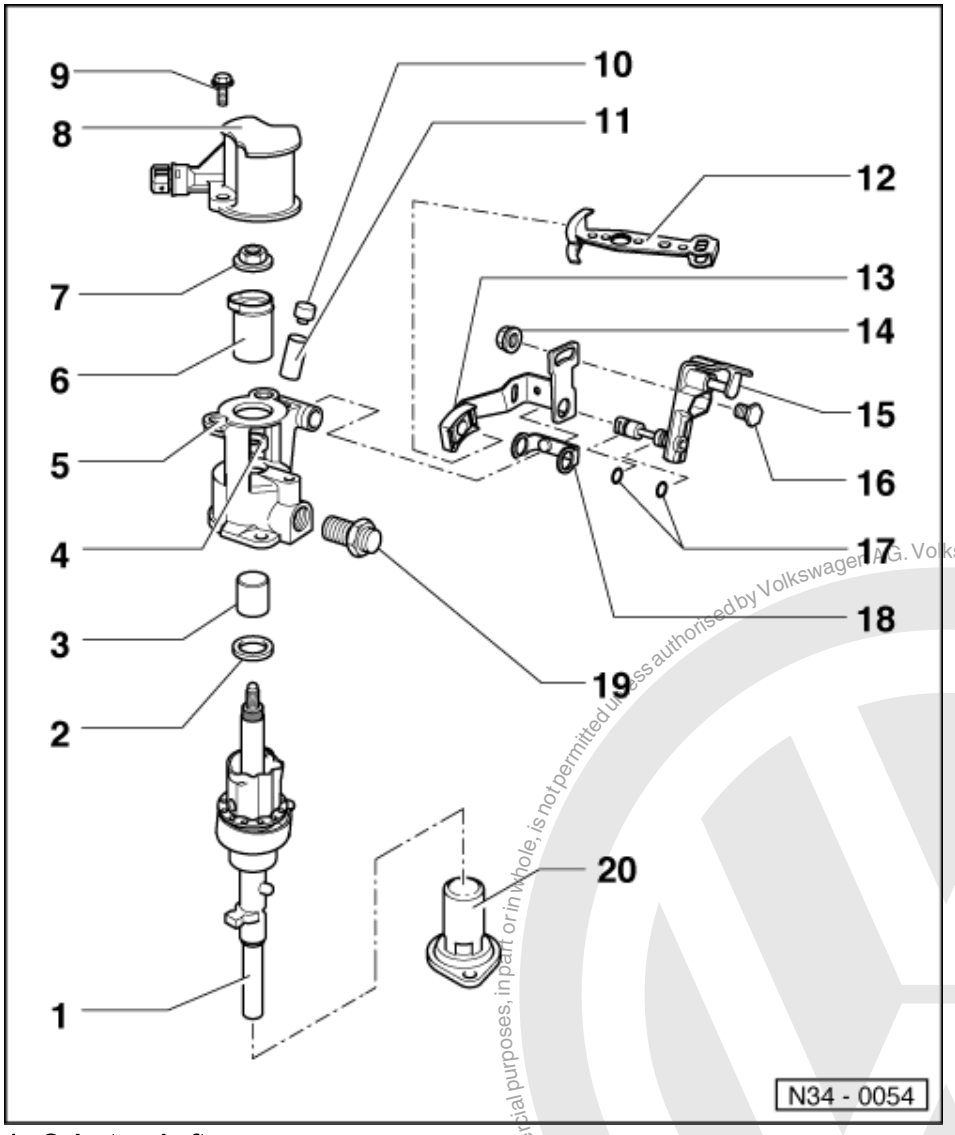

1 Selector shaft
2 Stop ring
3 Ball sleeve
- Removing => Fig. 1
- Pressing in => Fig. 2

4 Oil seal
- Lever out with screwdriver
- Installing => Fig. 3

5 Selector mechanism cover

Protected by copyright. Copying for private or commercial purposes, in part or in whole, is not permitted unless authorised by Volkswagen AG. Volkswagen AG does not guarantee or accept any liability with respect to the correctness of information in this document. Copyright by Volkswagen AG.
satelettronica

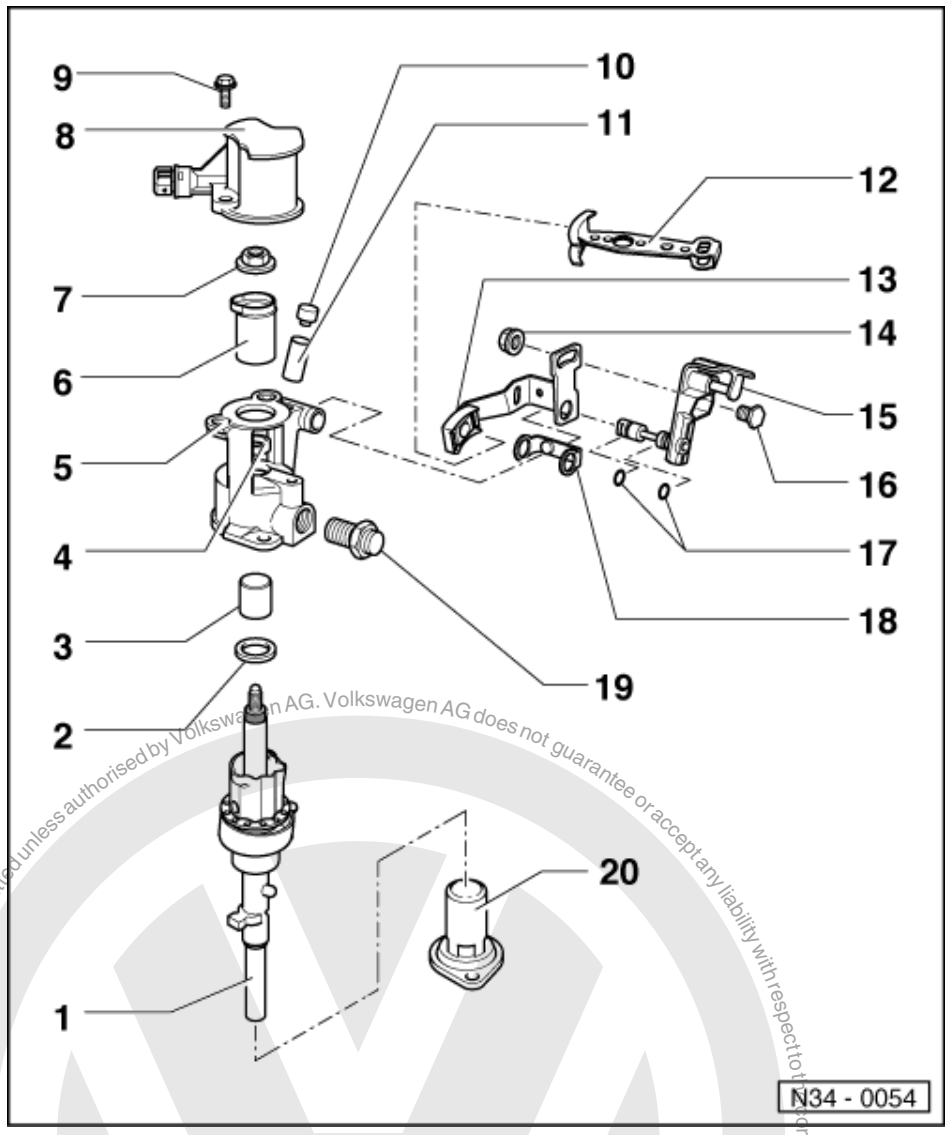

6 Sleeve
- The lug points to reverse light switch
- Lightly coat lug with MoS2 grease

7 Hexagon nut, 25 Nm
- Self-locking
- Always renew

8 Housing
- For reverse light switch

9 bolt

10 Cap
- For gearbox breather

11 Sleeve
- Drive in onto stop if present as an individual part

Protected by copyright. Copying for private or commercial purposes, in part or in whole, is not permitted unless authorised by Volkswagen AG. Volkswagen AG does not guarantee or accept any liability with respect to the correctness of information in this document. Copyright by Volkswagen AG.
satelettronica

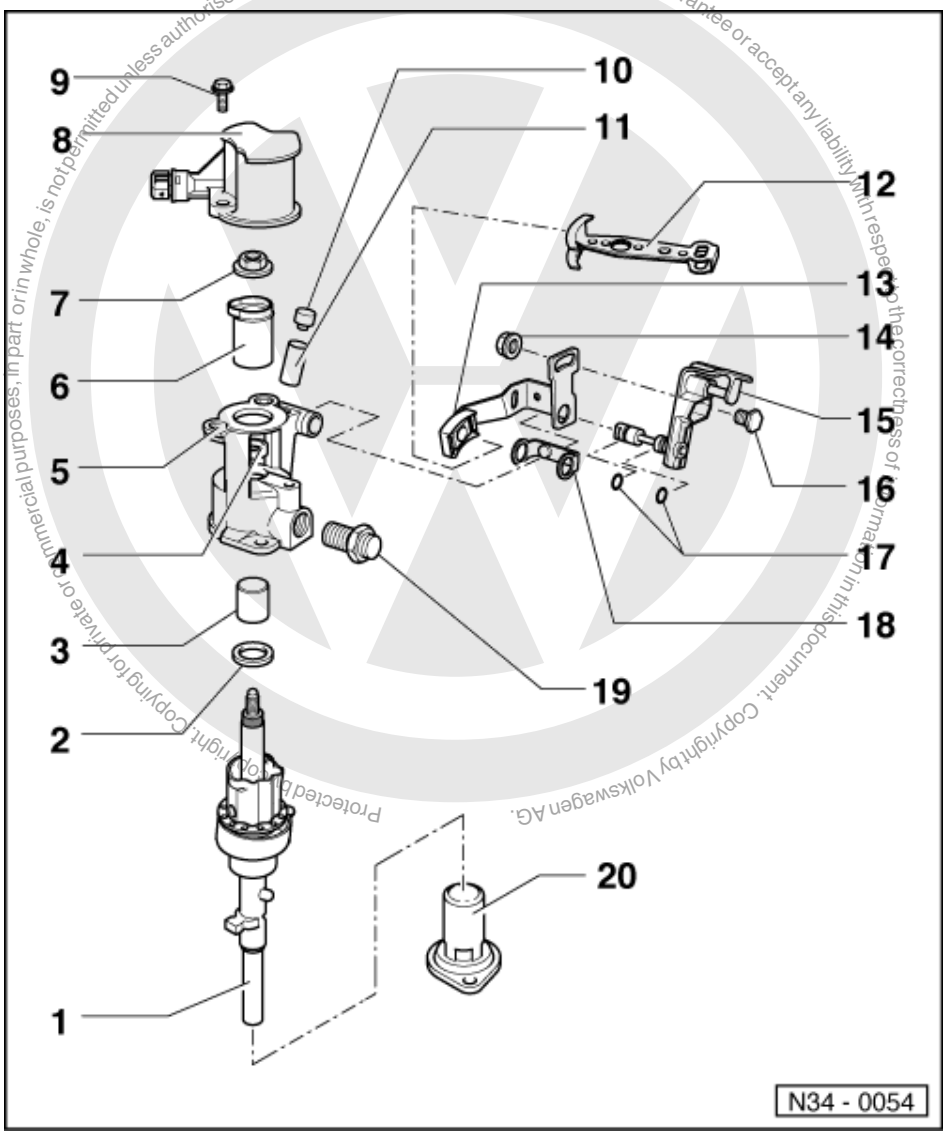

12 Gear selector lever

- Install so that the master spline aligns with selector shaft
- Can be replaced with the selector mechanism installed
- Installation position =>Page 34
- Replacing => Fig. 4

13 Relay lever

- Installation position => Page 34

14 Nut, 15 Nm

15 Actuating arm

- With axis pin for mounting relay lever
- Installation position => Page 34

16 Bolt

- Press into actuating arm

satelettronica

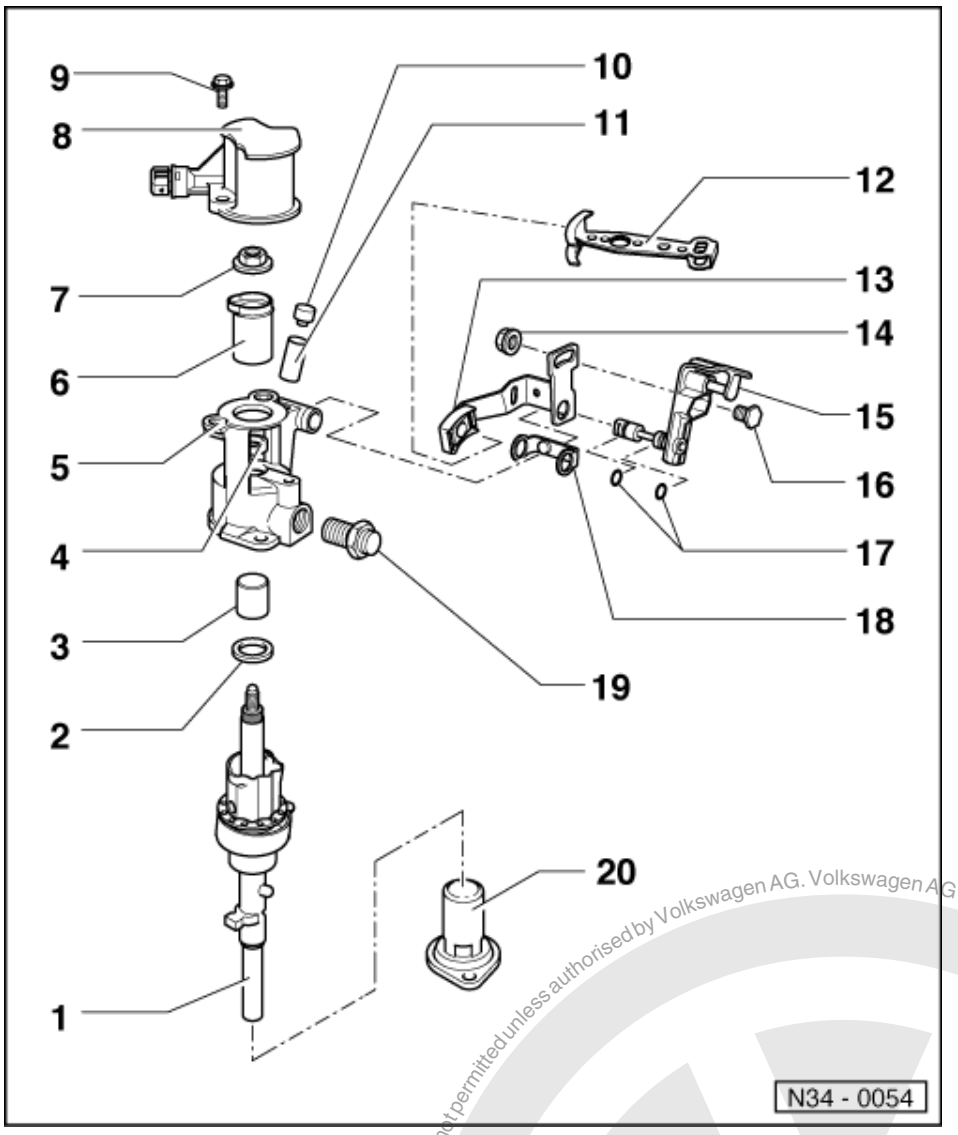

17 O-ring
- Pull onto actuating arm axis pin

18 Spacer
- Press into relay lever

19 Locking bolt, 40 Nm

20 End cover

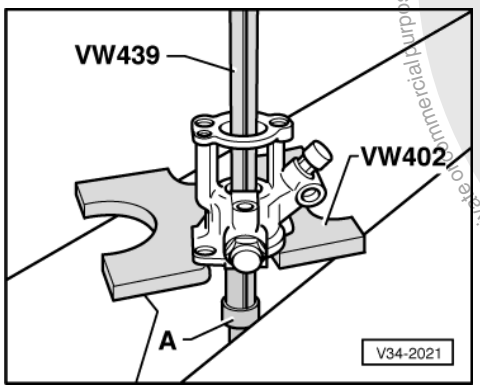

satelettronica
Protected by copyright. Copying for private or commercial purposes, in part or in whole, is not permitted unless authorised by Volkswagen AG. Volkswagen AG does not guarantee or accept any liability with respect to the correctness of information in this document. Copyright by Volkswagen AG.

-> Fig.1 Removing ball sleeve from selector mechanism cover

- Before pulling out ball sleeve, destroy plastic cage and remove balls.

A - Internal extractor, e.g. Kukko 21/3, 18.5 ... 23.5 mm

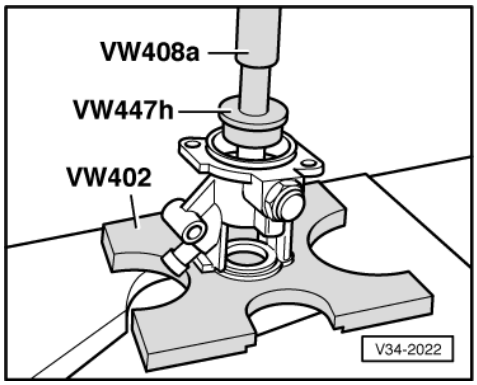

-> Fig.2 Knocking ball sleeve into selector mechanism cover

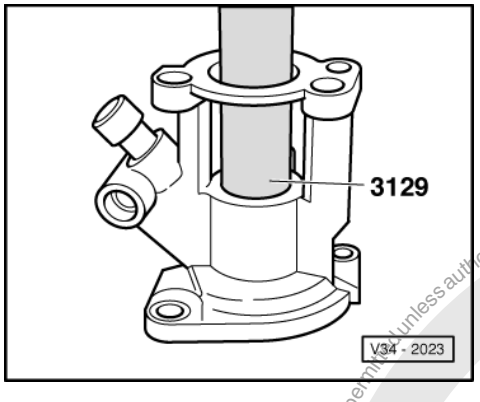

-> Fig.3 Installing oil seal onto stop

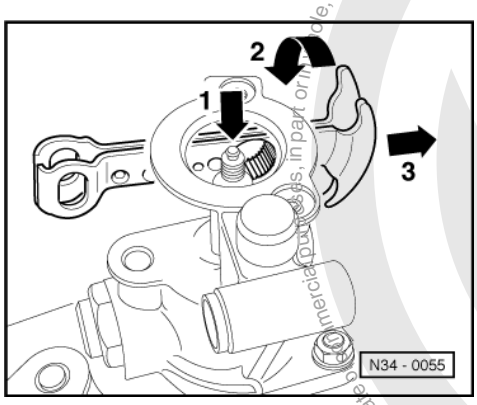

-> Fig.4 Replacing gear selector lever

- Press selector shaft down (arrow -1-).
- Twist gear selector lever round (arrow direction -2-) and pull out in arrow direction -3-.

Protected by copyright. Copying for private or commercial purposes, in part or in whole, is not permitted unless authorised by Volkswagen AG. Volkswagen AG does not guarantee or accept any liability with respect to the correctness of information in this document. Copyright by Volkswagen AG.
satelettronica

7 - Dismantling and assembling selector forks

7.1 - Dismantling and assembling selector forks

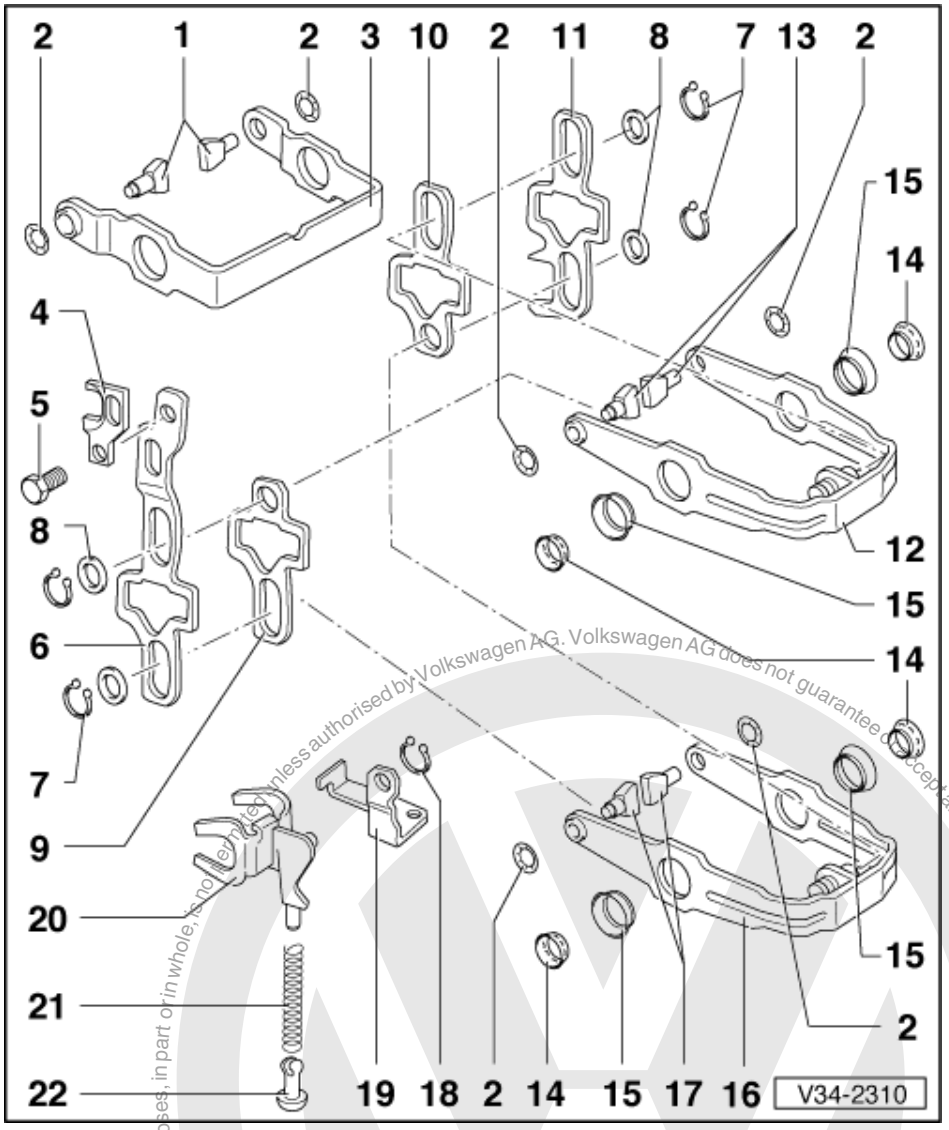

1 Selector segment
- Identification => Fig. 1
- After installing the circlip the selector segment must rotate freely

2 Circlip
- Lever off with screwdriver
- Installing => Fig. 2
- Always renew

3 5th gear selector fork
- Adjusting => Page 86

4 5th gear selector jaw

5 Bolt, 25 Nm

Protected by copyright. Copyright by Volkswagen AG. Volkswagen AG does not guarantee or accept any liability with respect to the correctness of information in this document. Copyright by Volkswagen AG. Reproduction, in part or in whole, is not permitted unless authorised by Volkswagen AG.
satelettronica

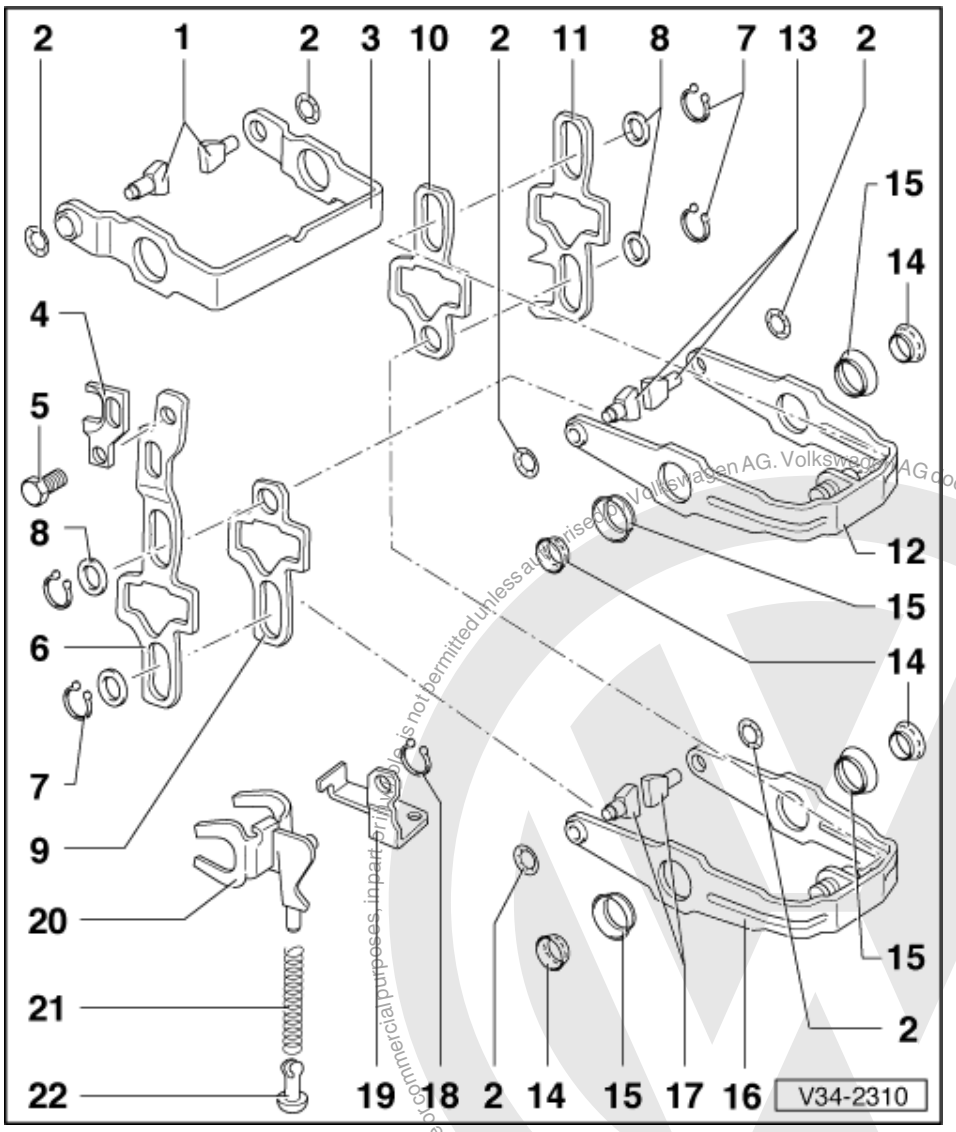

6 5th gear selector plate
7 Circlip
8 Washer
9 3rd/4th gear selector plate
10 1st/2nd gear selector plate
11 Reverse gear selector plate
12 3rd/4th gear selector fork
- With selector segments => Fig. 5

13 Selector segment
- Identification => Fig. 1
- After installing the circlip the segment must rotate freely

14 Bearing

Protected by copyright. Copying for private or commercial purposes, in part or in whole is not permitted unless authorised by Volkswagen AG. Volkswagen AG does not guarantee or accept any liability with respect to the correctness of information in this document. Copyright by Volkswagen AG.
satelettronica

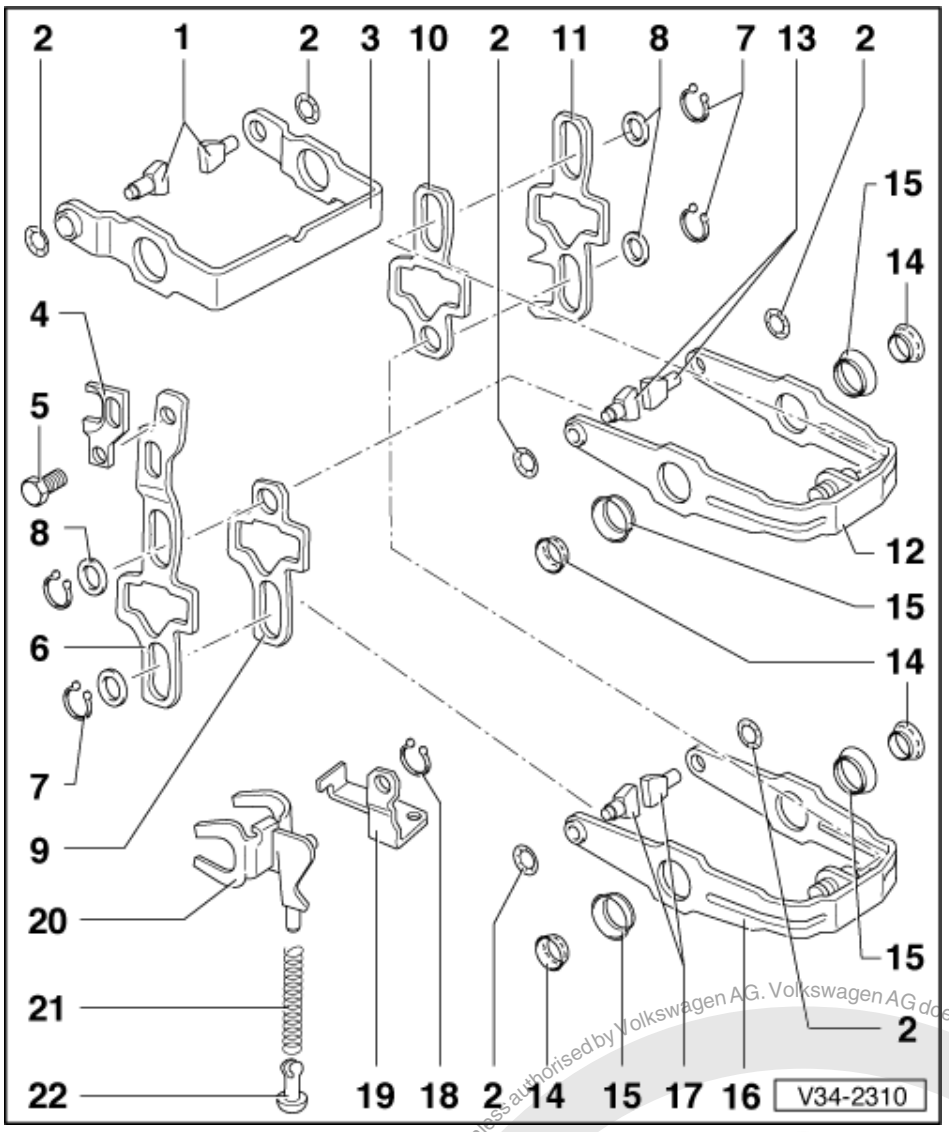

15 Bearing inner race
- Removing => Fig. 3
- Pressing in => Fig. 4

16 1st/2nd selector fork
- With selector segments => Fig. 5

17 Selector segment
- Identification => Fig. 1
- After installing the circlip the segment must rotate freely

18 Circlip

19 Support for reverse gear selector fork

20 Reverse gear selector fork

21 Spring

22 Domed sliding piece

satelettronica
Protected by copyright. Copying for private or commercial purposes, in part or in whole, is not permitted unless authorised by Volkswagen AG. Volkswagen AG does not guarantee or accept any liability with respect to the correctness of information in this document. Copyright by Volkswagen AG.

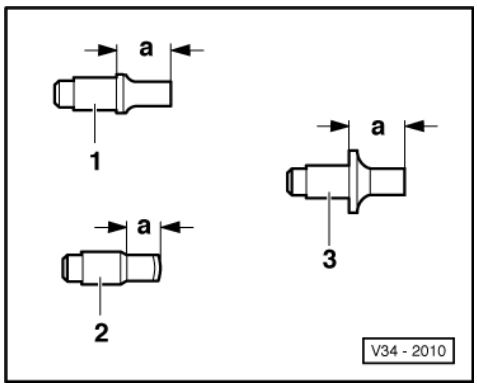

-> Fig.1 Identifying selector segments

Dimension -a-

1 - 1st and 2nd gear selector segments = 12.1 mm

2 - 3rd and 4th gear selector segments = 7.7 mm

3 - 5th gear selector segments = 12.1 mm

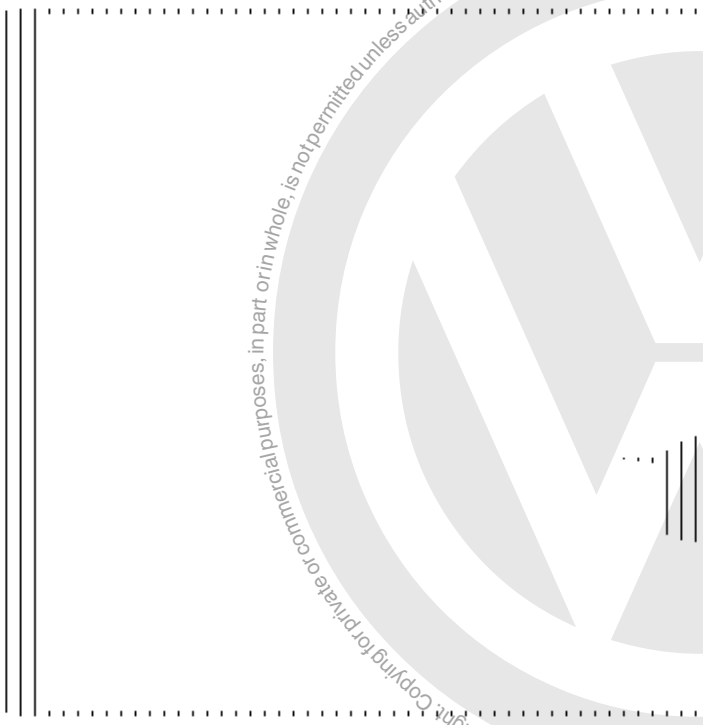

-> Fig.2 Installing circlip

- Press circlip into selector segment groove with socket.

Note:

After installing the circlip the selector segment must rotate freely.

Protected by copyright. Copying for private or commercial purposes, in part or in whole, is not permitted unless authorised by Volkswagen AG. Volkswagen AG does not guarantee or accept any liability with respect to the correctness of information in this document. Copyright by Volkswagen AG.
satelettronica

A - Socket driver, 10 mm A/F

B - Vice clamps

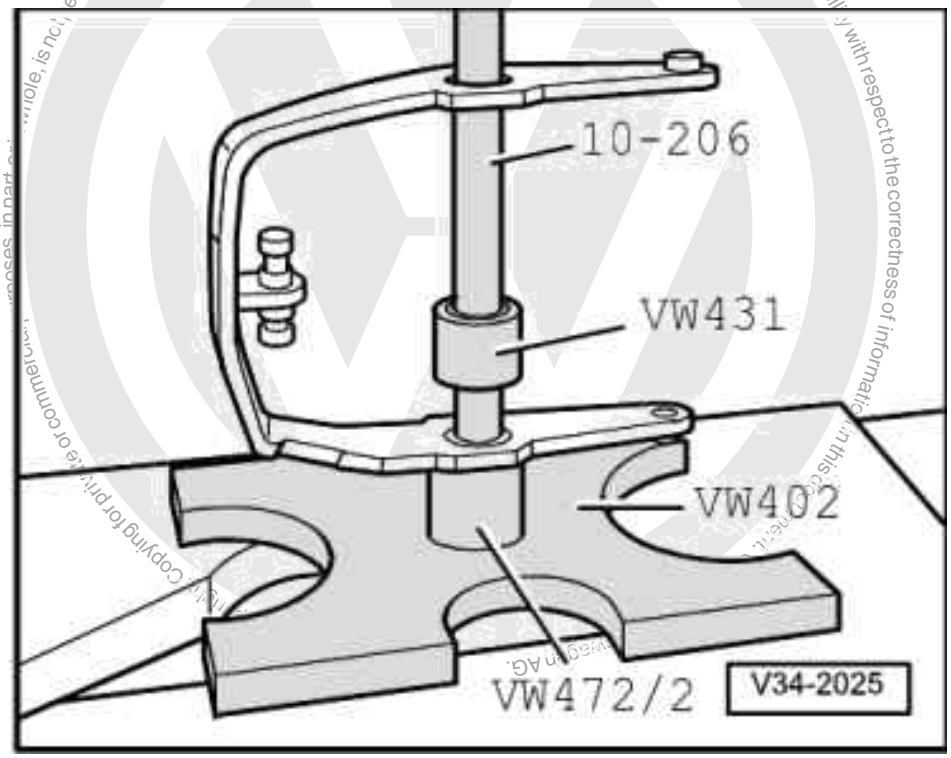

-> Fig.3 Removing bearing inner race

Note:

When removing and installing the inner races do not bend selector forks.

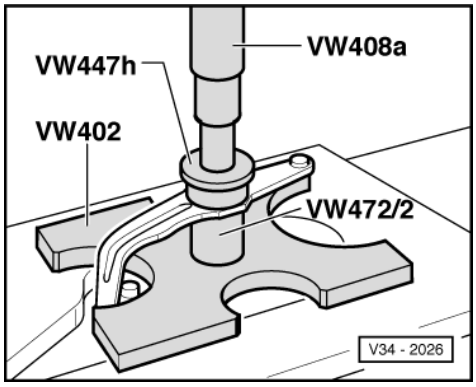

satelettronica

-> Fig.4 Pressing inner race in onto stop

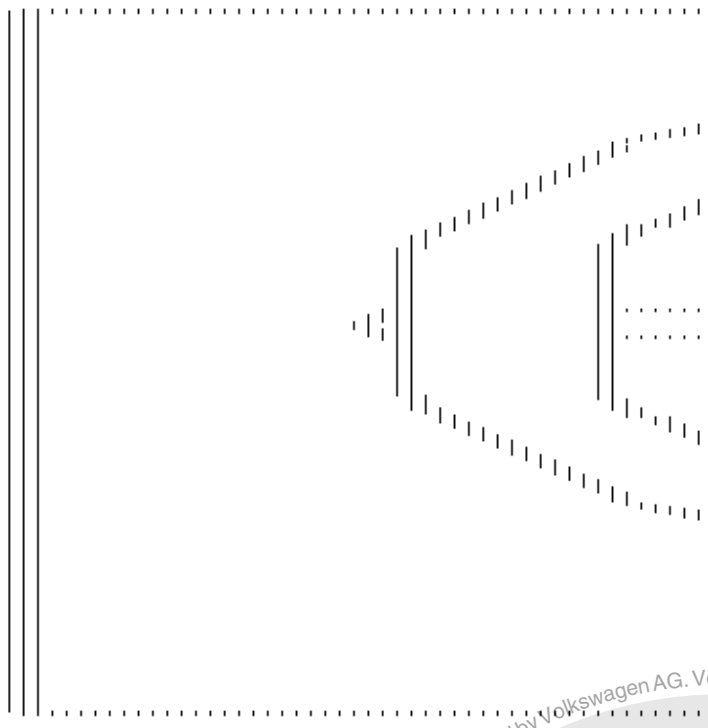

-> Fig.5 Selector fork with selector segments installed

	Dim. -a- (mm)
1st/2nd gear selector fork	87.2 ... 87.9
3rd/4th gear selector forks	96.0 ... 96.7

Selector segment assignment => Fig. 1 .

satelettronica
Protected by copyright. Copying for private or commercial purposes, in part or in whole, is not permitted unless authorised by Volkswagen AG. Volkswagen AG does not guarantee or accept any liability with respect to the correctness of information in this document. Copyright by Volkswagen AG.

35 - Gears, Shafts

1 - Dismantling and assembling input shaft

1.1 - Dismantling and assembling input shaft

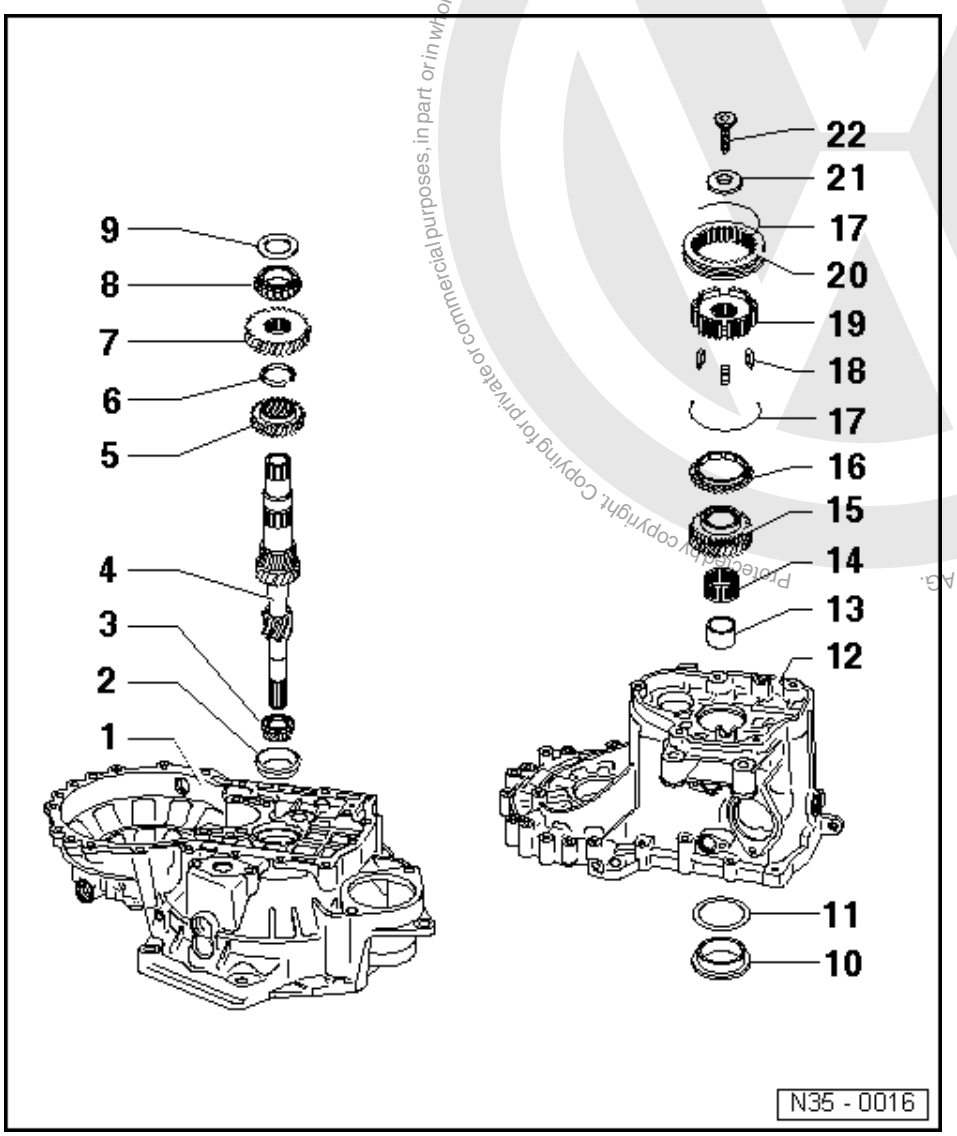

Notes:

- When installing new gear wheels, consult technical data =>Page 2 .
- If the position of the taper roller bearings is affected when exchanging parts, the input shaft must be re-adjusted. See adjustment overview => Page 173

1 Clutch housing

2 Taper roller bearing outer race
- Removing => Fig. 1
- Pressing in => Fig. 2

3 Taper roller bearing inner race
- Knock-off the input shaft with a drift

satelettronica

- Pressing on => Fig. 3

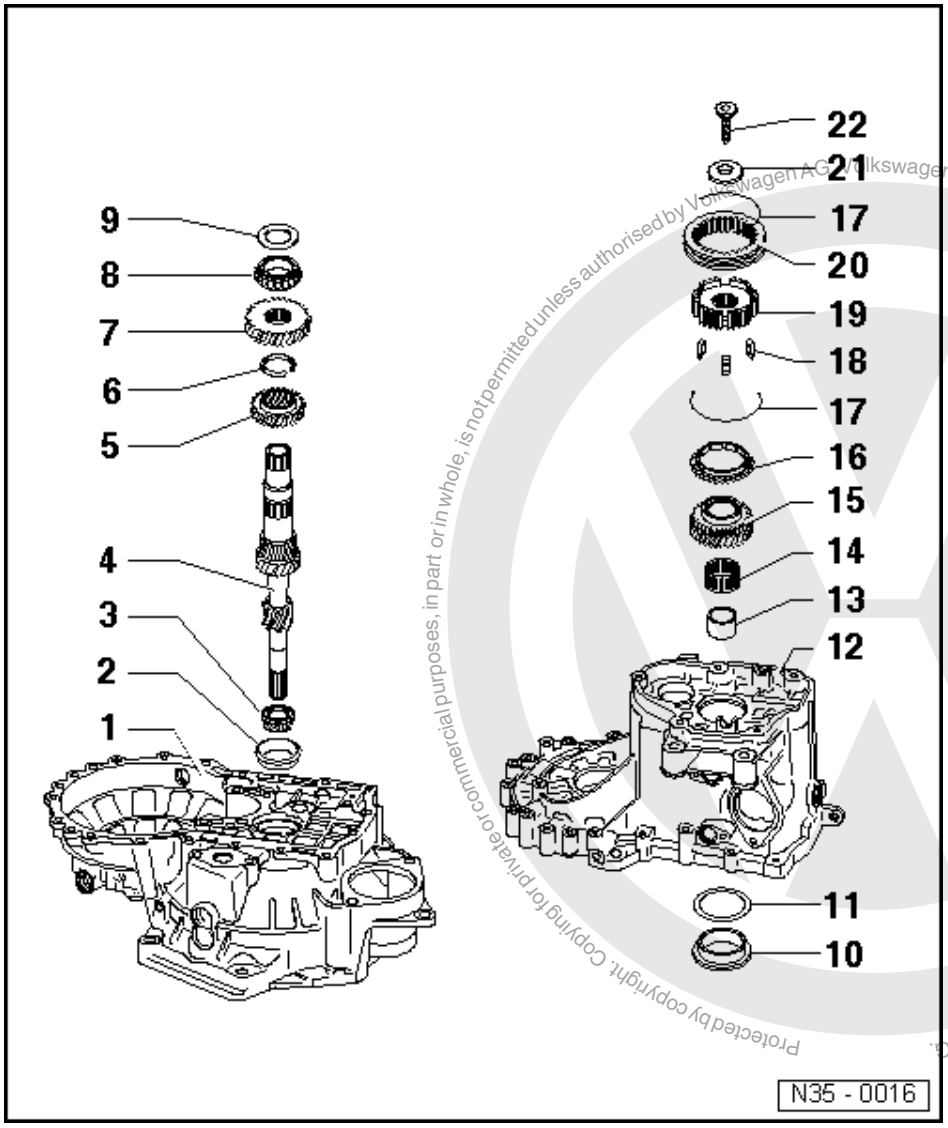

Protected by copyright. Copying for private or commercial purposes, in part or in whole, is not permitted unless authorised by Volkswagen AG. Volkswagen AG does not guarantee or accept any liability with respect to the correctness of information in this document. Copyright by Volkswagen AG.
satelettronica

4 Input shaft
- Adjusting => Page 118

5 3rd gear wheel
- Shoulder points to 4th gear
- Pressing off => Fig. 5
- Pressing on => Fig. 6

6 Circlip
- Always renew

7 4th gear wheel
- Pressing off with taper roller bearing outer race and sleeve => Fig. 4
- Pressing on => Fig. 7
- Collar faces to 3rd gear

8 Taper roller bearing inner race
- Pressing off with 4th gear wheel and sleeve => Fig. 4
- Pressing on => Fig. 8

Copyright by Volkswagen AG. Volkswagen AG does not guarantee or accept any liability with respect to the correctness of information in this document. Copying for private or commercial purposes, in part or in whole, is not permitted unless authorised by Volkswagen AG.

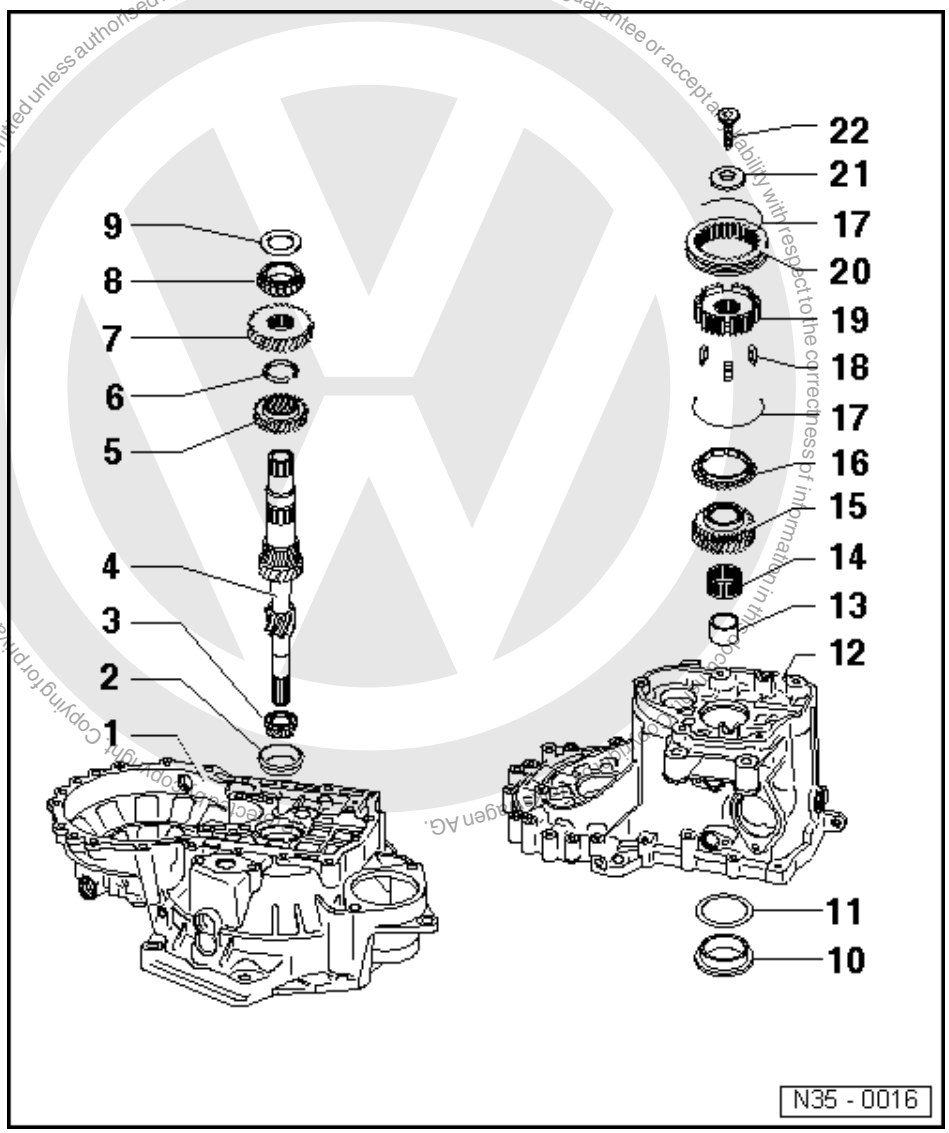

9 Thrust washer

10 Taper roller bearing outer race

- Pressing out => Fig. 10
- Pressing in => Fig. 11

11 Shim

- Determining thickness => adjusting input shaft, Page 118

12 Gearbox housing

13 Sleeve

- For needle roller bearing
- Press off with 4th gear wheel and taper roller bearing inner race => Fig. 4
- Pressing on => Fig. 9
- Place thrust washer on before installing (item 9)

14 Needle roller bearing

15 5th gear wheel

- Pull off together with 5th gear synchro-hub =>from Page 70

satelettronica

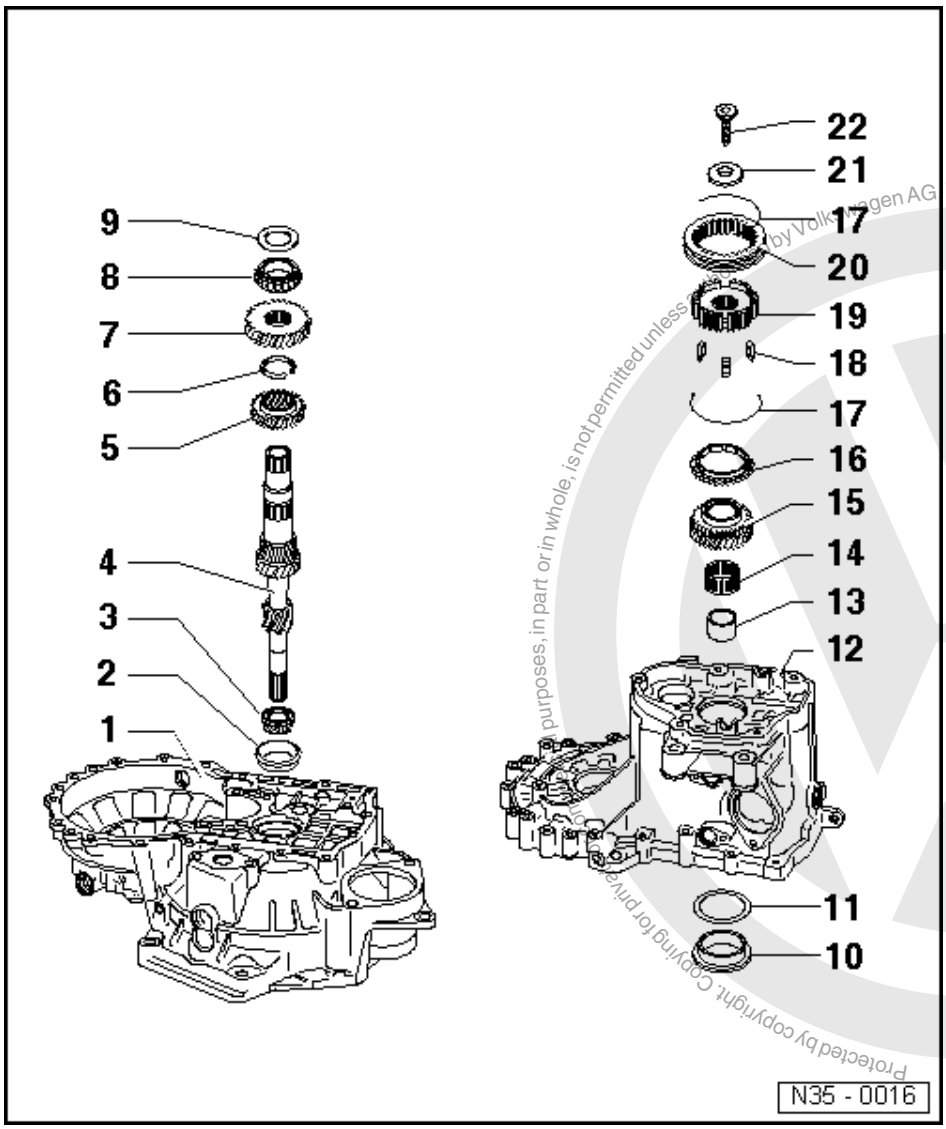

16 5th gear synchro-ring
- With cast locking pieces
  => Illustration N35-0018, Page 84
- Check for wear
  => Page 83

17 Spring
- Installation position => Fig. 13

18 Lock pieces (Qty. 3)
- Installation position => Fig. 12

19 5th gear synchro-hub
- Removing and installing
  => Page 70

20 5th gear locking collar
- Removing and installing
  =>Page 70

Protected by copyright. Copying for private or commercial purposes, in part or in whole, is not permitted unless authorised by Volkswagen AG. Volkswagen AG does not guarantee or accept any liability with respect to the correctness of information in this document. Copyright by Volkswagen AG.
satelettronica

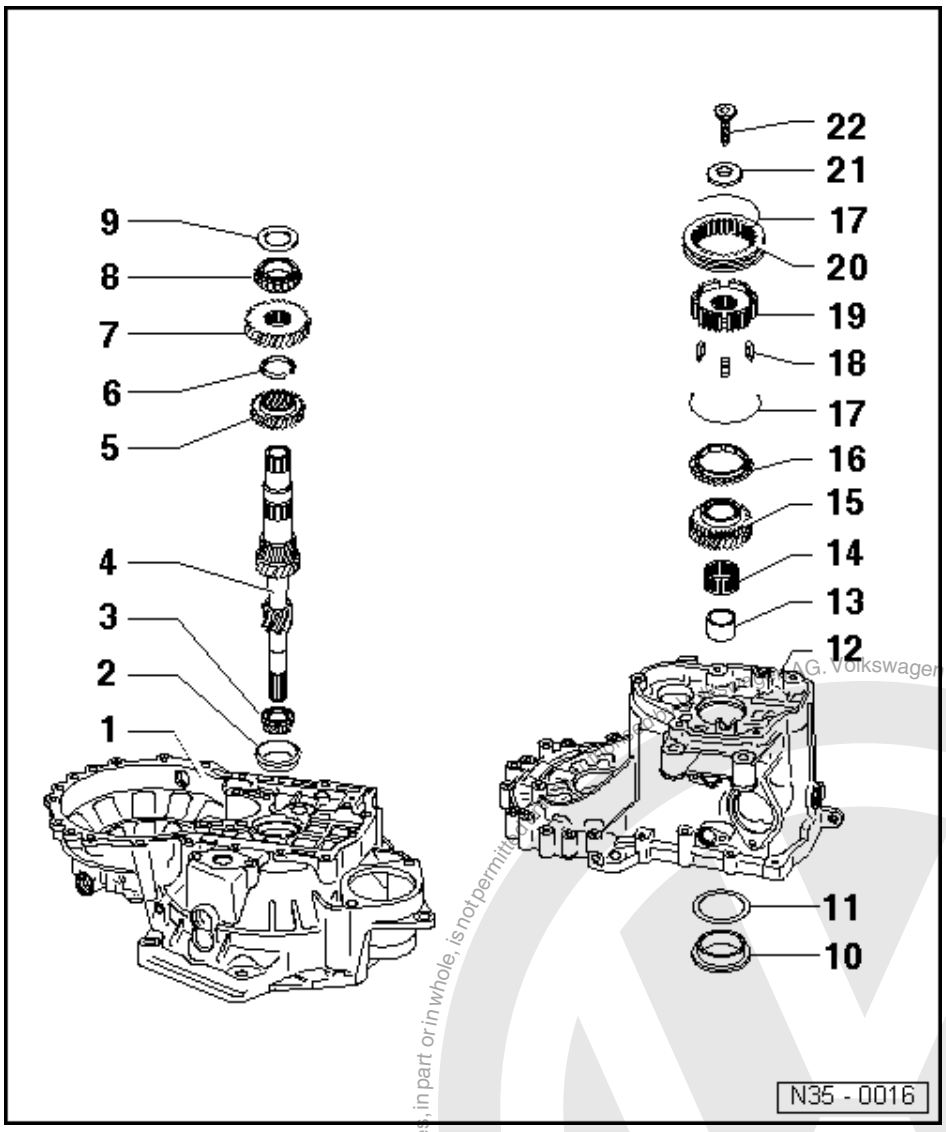

21 Dished washer

- Installation position => Page 85

22 Torx socket head bolt M 10, 80 Nm

- Fitted piece on bolt head locates dished spring => Page 85

Protected by copyright. Copying for private or commercial purposes, in part or in whole, is not permitted. Copyright by Volkswagen AG. Volkswagen AG does not guarantee or accept any liability with respect to the correctness of information in this document.
satelettronica

Unless authorised by Volkswagen AG. Volkswagen AG does not guarantee or accept any liability with respect to the correctness of information in this document. Copyright by Volkswagen AG. Protected by copyright.

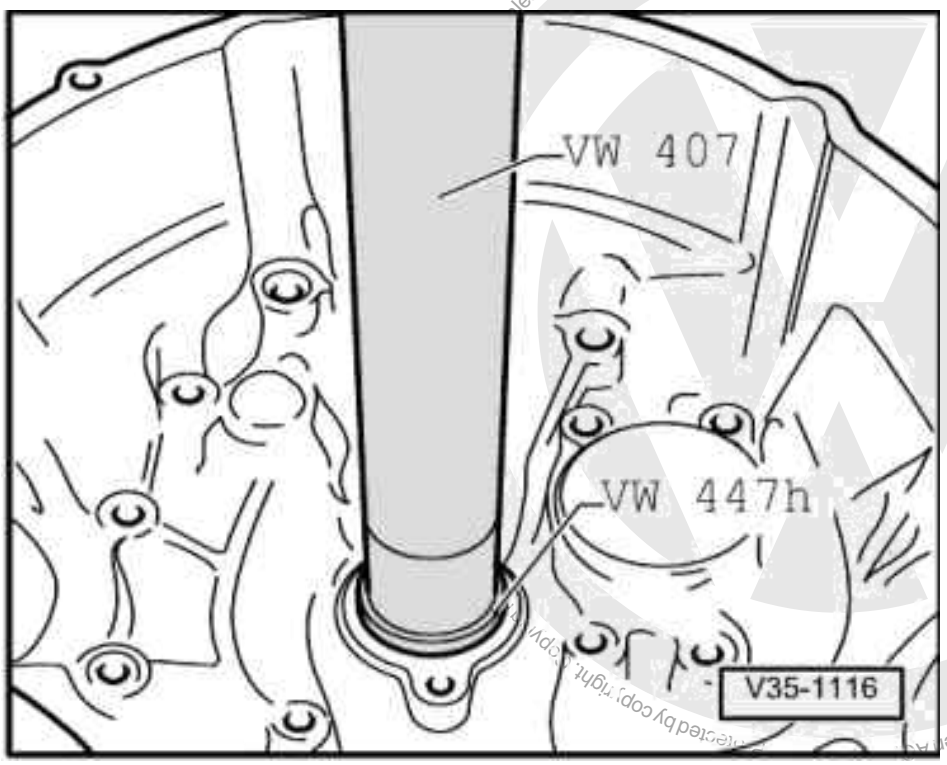

-> Fig.1 Pressing out taper roller bearing outer race

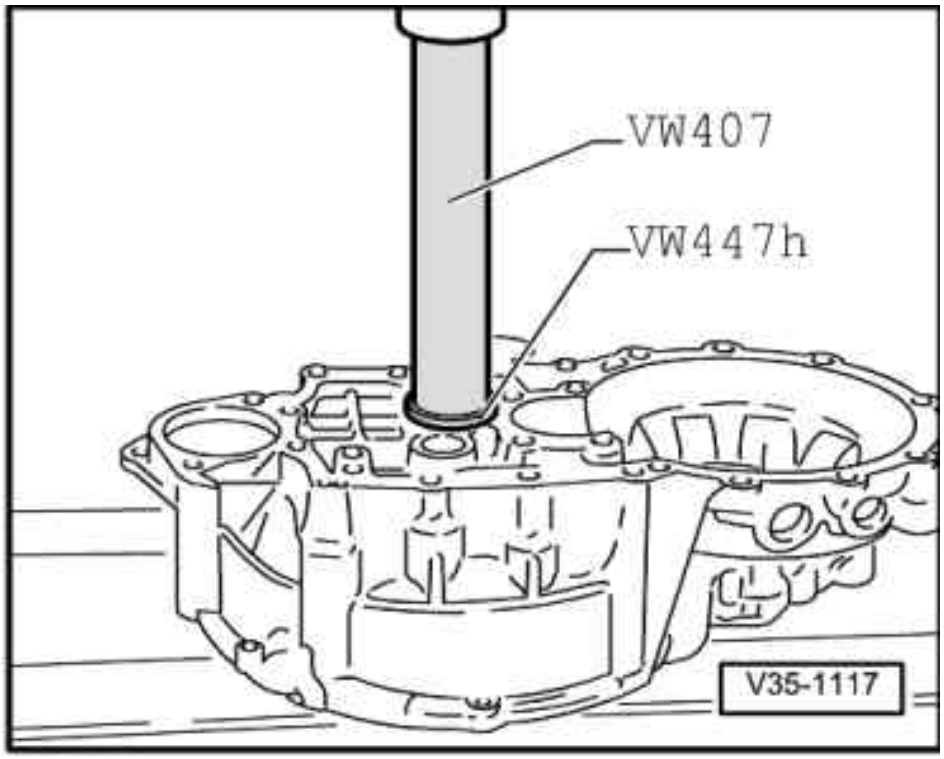

satelettronica

-> Fig.2 Pressing in taper roller bearing outer race

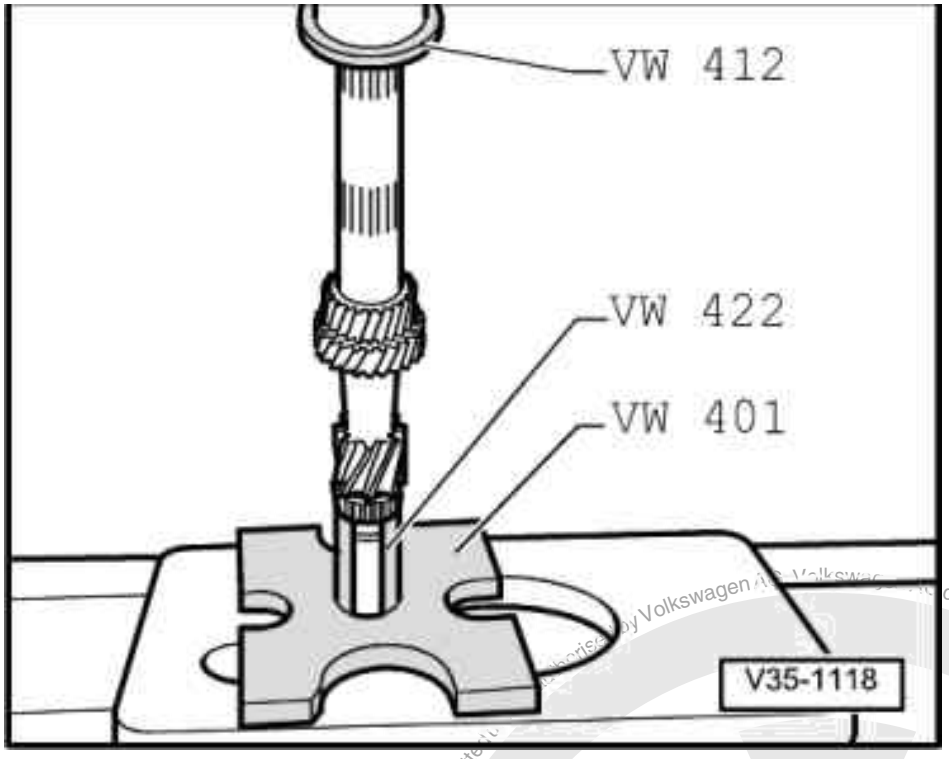

-> Fig.3 Pressing on taper roller bearing inner race

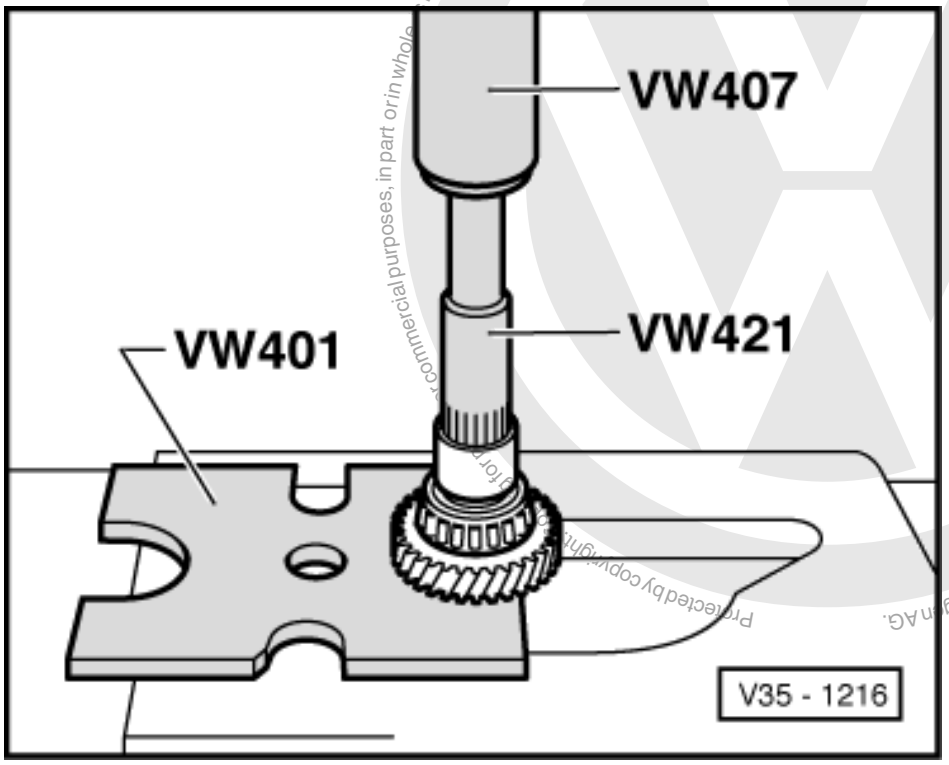

satelettronica

-> Fig.4 Pressing off 4th gear wheel with taper roller bearing and sleeve

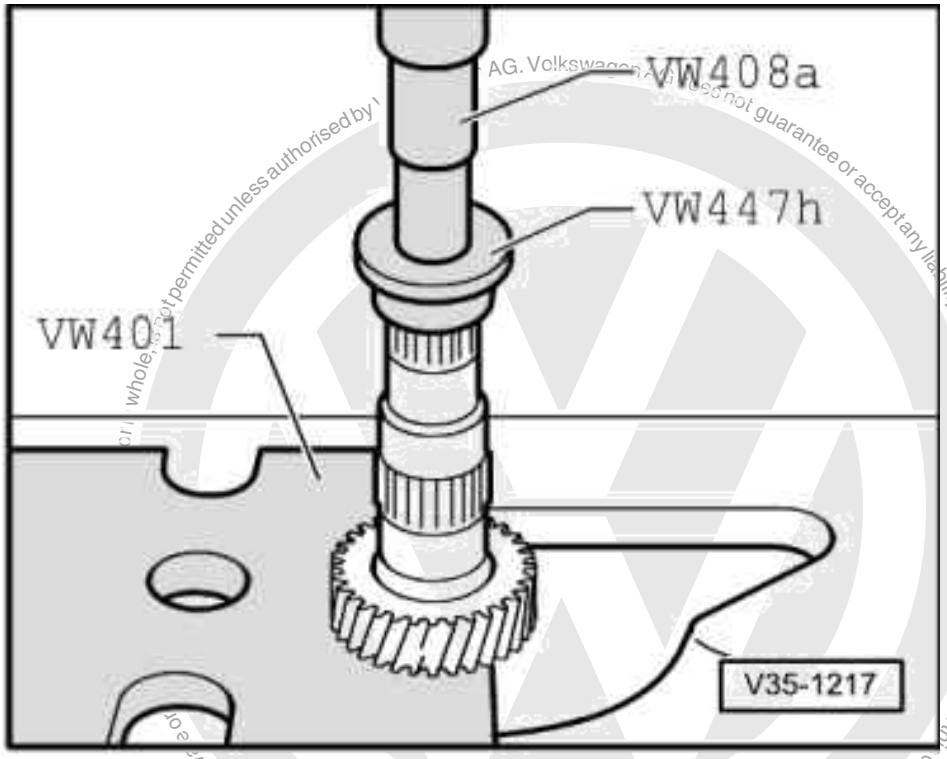

-> Fig.5 Pressing off 3rd gear wheel

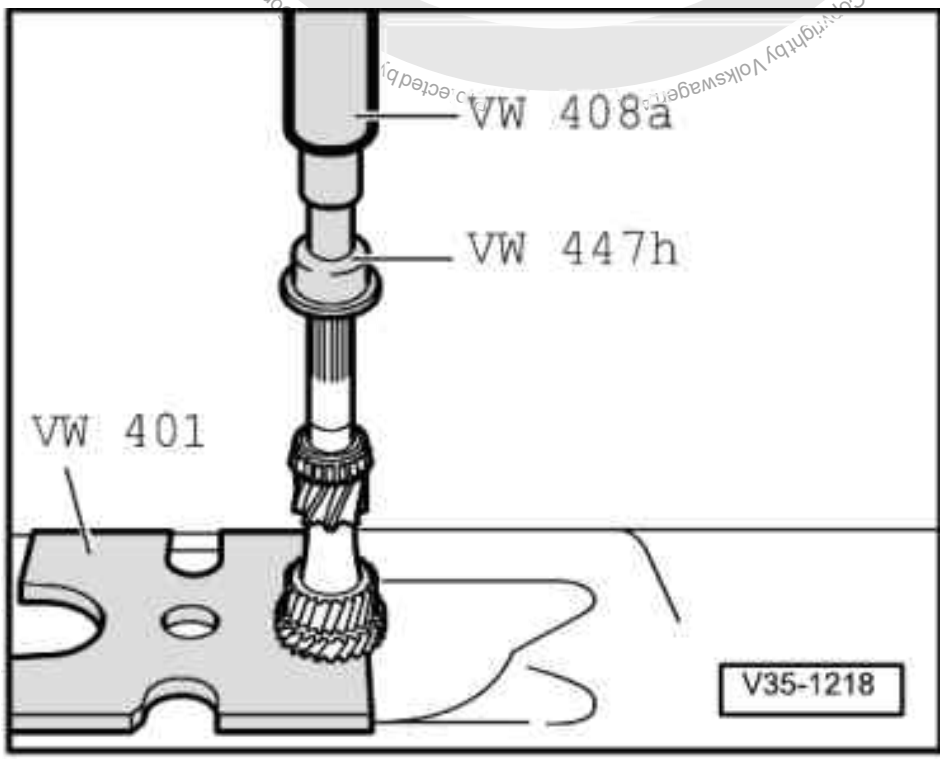

satelettronica

-> Fig.6 Pressing on 3rd gear wheel

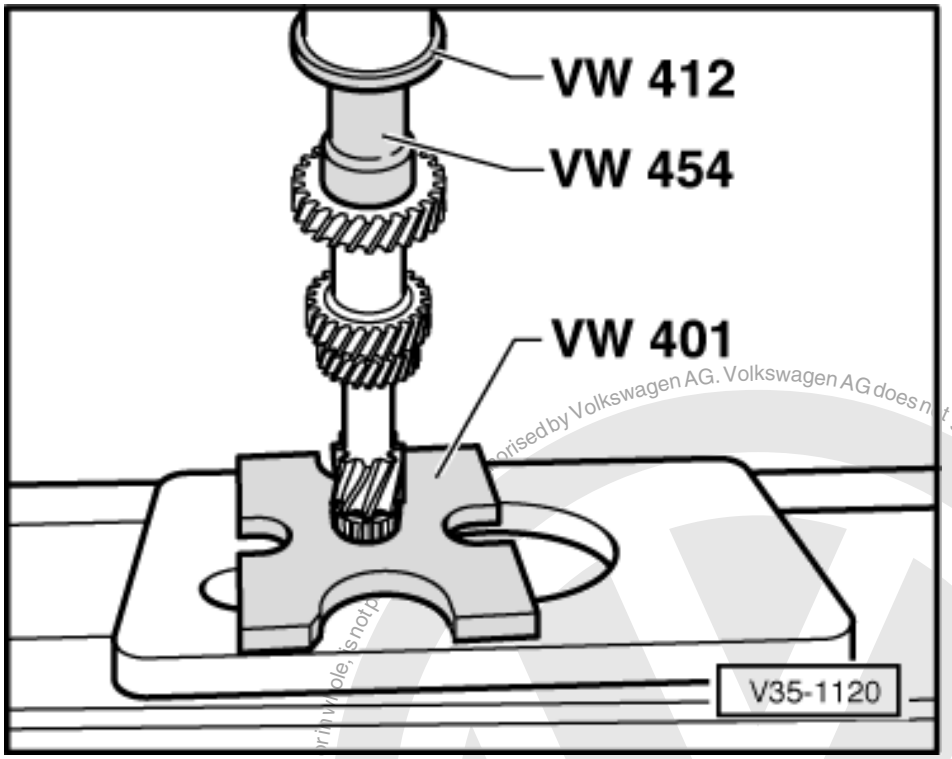

-> Fig.7 Pressing on 4th gear wheel

Shoulder points to 3rd gear.

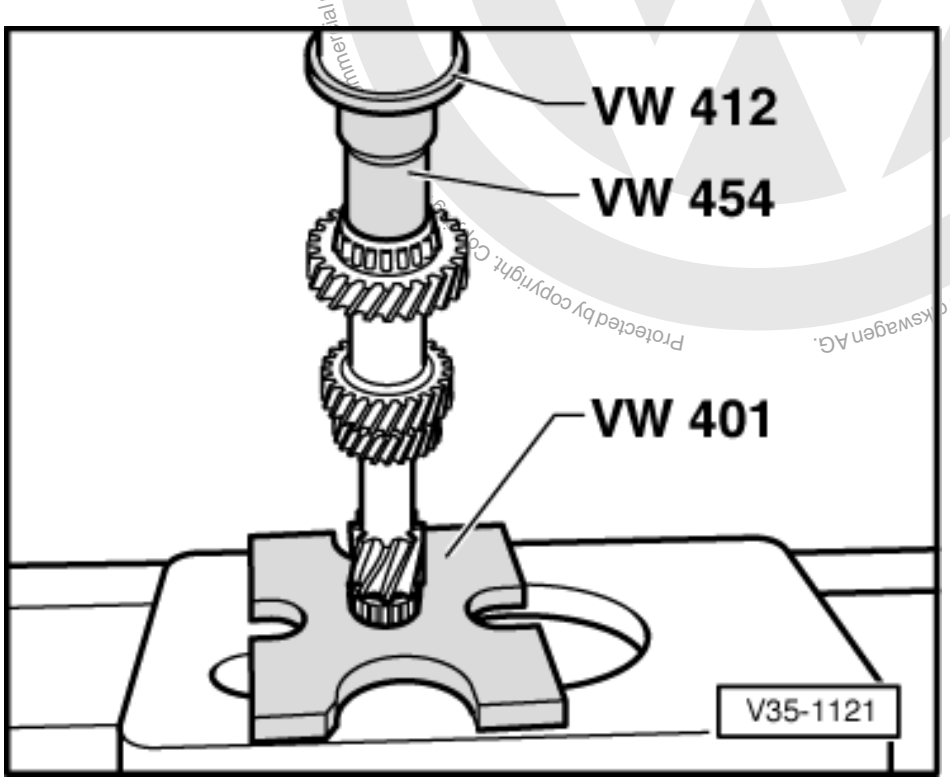

Protected by copyright. Copyright by Volkswagen AG.
Commercial purposes, in part or in whole, is not permitted without the consent of Volkswagen AG. Volkswagen AG does not guarantee or accept any liability with respect to the correctness of information in this document.
satelettronica

-> Fig.8 Pressing on taper roller bearing inner race

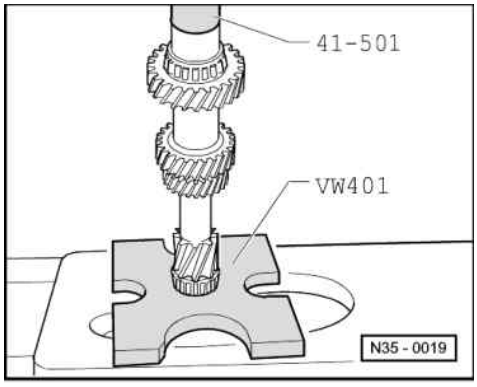

-> Fig.9 Pressing on sleeve for needle roller bearing

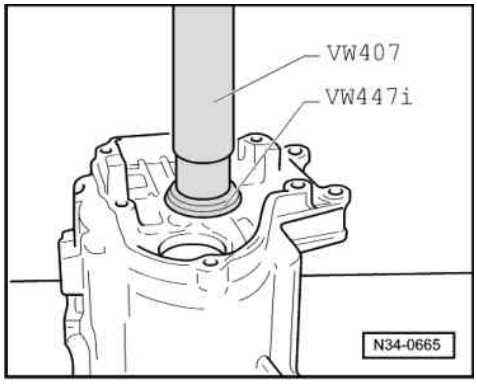

-> Fig.10 Pressing out taper roller bearing outer race

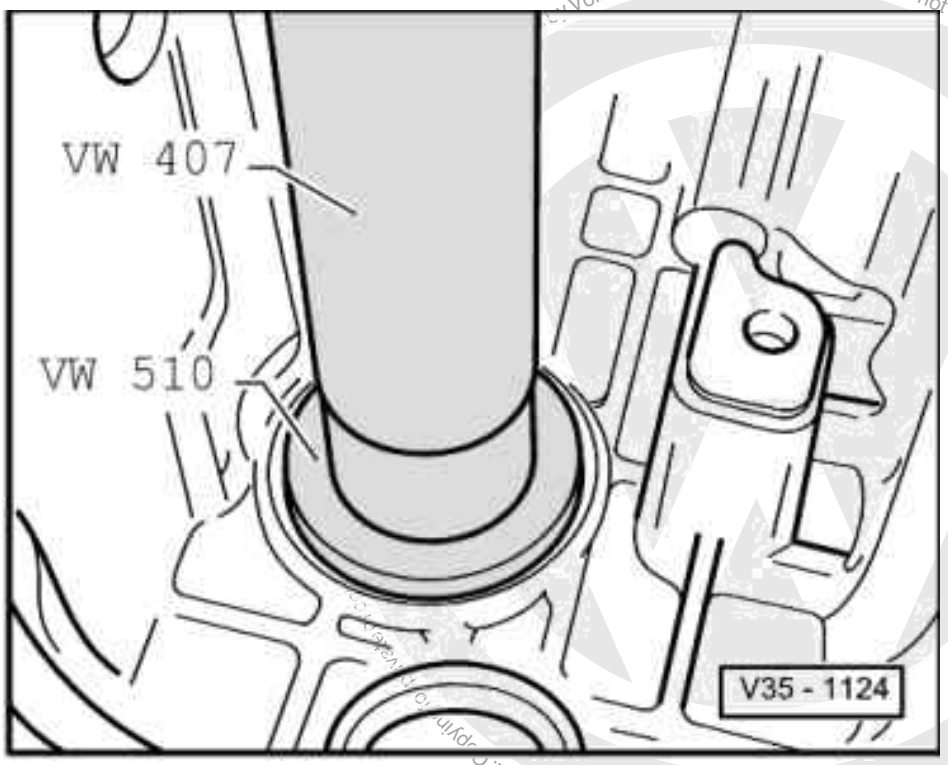

Protected by copyright. Copyright by Volkswagen AG. Volkswagen AG does not guarantee or accept any liability with respect to the correctness of information in this document.
satelettronica

-> Fig.11 Pressing in taper roller bearing outer race

- Install with shim after adjusting input shaft.

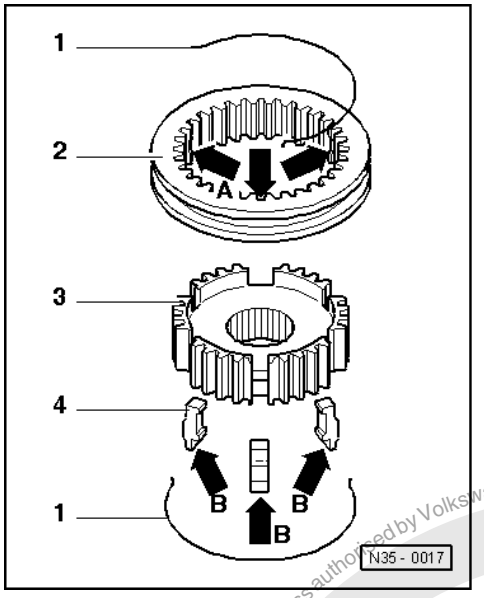

-> Fig.12 5th gear synchronizer

1 - Springs for lock pieces
2 - Locking collar
With 3 recesses (arrows A) for the locking pieces (item 4)
3 - Synchro-hub
4 - Locking pieces
Installation position: The thin extension (arrow B) faces the pointed teeth of the locking collar (item 2)

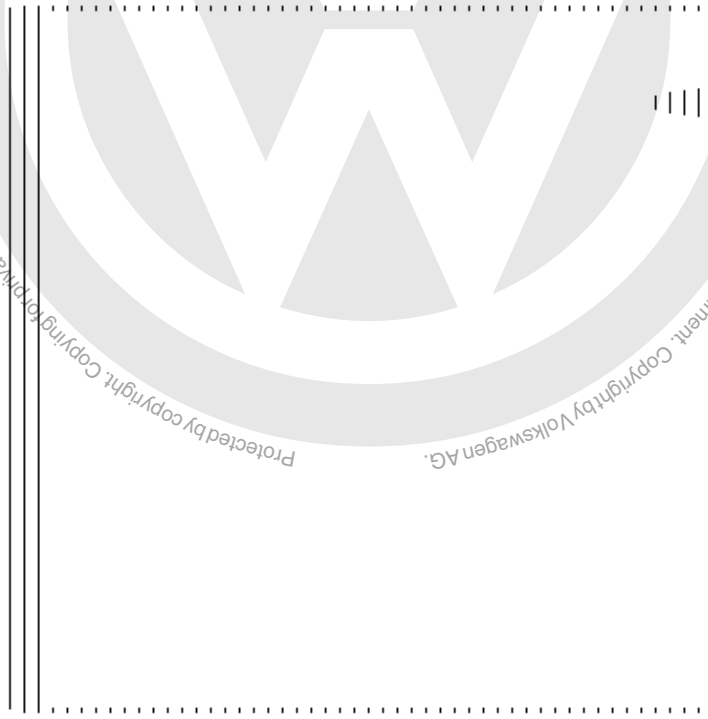

Protected by copyright. Copying for private or commercial purposes, in part or in whole, is not permitted unless authorised by Volkswagen AG. Volkswagen AG does not guarantee or accept any liability with respect to the correctness of information in this document. Copyright by Volkswagen AG.
satelettronica

-> Fig.13 Assembling 5th gear locking collar/synchro-hub

- Push locking collar over synchro-hub.

Pointed teeth -A- and shoulder -B- of synchro-hub face in same direction. The recesses for the locking pieces in locking collar and synchro-hub must be aligned (Fig. 12).

- Insert locking pieces (Installation position: Fig. 12).
- Insert springs offset by 120° underneath lug -C-. The angled ends of the spring must be directly behind the locking pieces (arrows).

2 - Adjusting input shaft

2.1 - Adjusting input shaft

(Determining thickness of shim for input shaft)

It is only necessary to readjust the input shaft when the following components are renewed:

- Gearbox housing
- Clutch housing
- Input shaft
- 4th gear wheel

or the

- Taper roller bearing

Adjustment overview => Page 173

Special tools, testers and auxiliary items

- Universal dial gauge bracket VW 387
- Measuring plate VW 385/17
- Dial gauge
- Press disc VW 510
- Press disc VW 447i

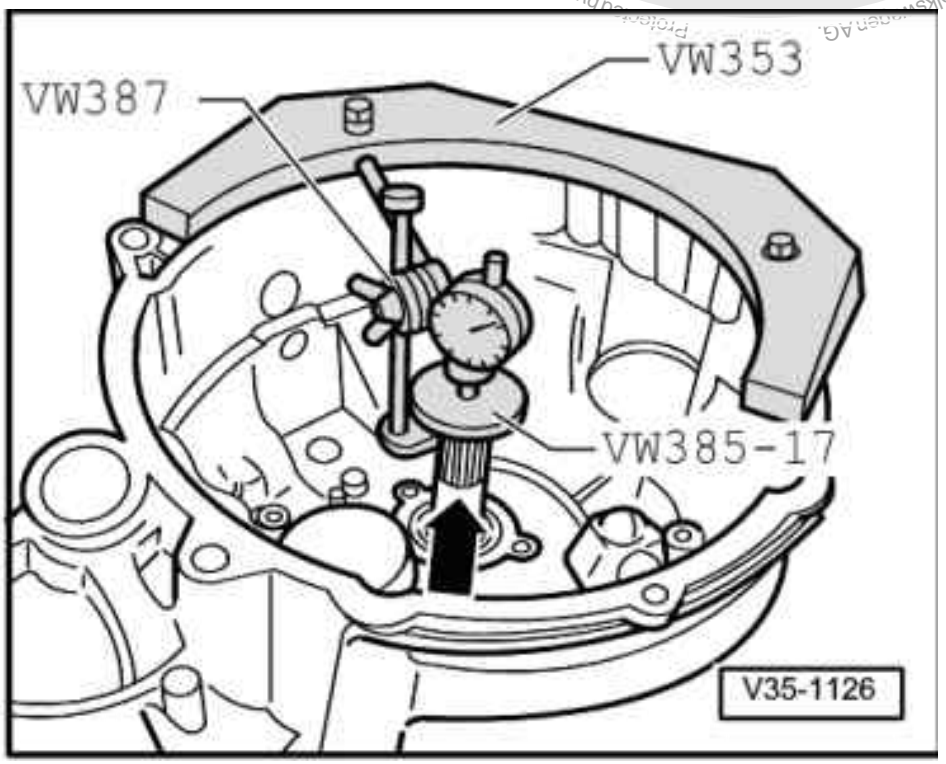

Protected by copyright. Copying for private or commercial purposes, in part or whole, is not permitted unless authorised by Volkswagen AG. Volkswagen AG does not guarantee or accept any liability with respect to the correctness of information in this document. Copyright by Volkswagen AG.
satelettronica

- Press taper roller bearing outer race without shim into gearbox housing onto stop, using VW 510.
- Install input shaft in clutch housing and assemble gearbox housing. Tighten hexagon head bolts to 25 Nm and then turn 90° further.
- -> Fit measuring appliance and D.T.I. in clutch housing (large taper roller bearing in gearbox housing).
- Before taking any measurements rotate input shaft to allow bearing to settle. Set D.T.I. to "O" with 1 mm preload.

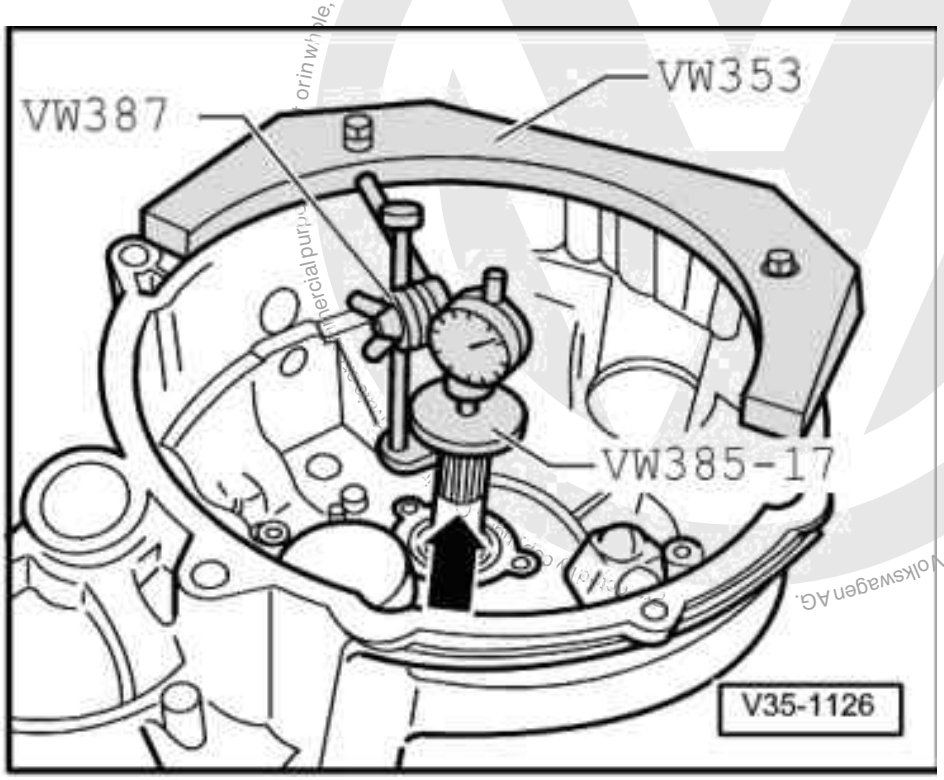

Warning!
This procedure must be repeated for each measuring process, otherwise the gauge will not return to original position.

- -> Press input shaft in direction of D.T.I. (arrow).
- Read off and note clearance indicated on D.T.I. (example 1.21).

Note:

D.T.I. does not return to original position.

- Determine thickness of shim from table => Page 119 (example 1.175).
- Remove input shaft and press taper roller bearing outer race out of gearbox housing using VW 447i .
- Press taper roller bearing outer race together with the 1.175 shim into gearbox housing.
- Assemble gearbox housing and tighten hexagon head bolts to 25 Nm and then turn 90° further.

2.2 - Table of adjustment shims

Measured	Shim	
bearing clearance (mm)	Thickness (mm)	Part No.
0.671 ... 0.699	0.650	02A 311 140
0.700 ... 0.724	0.675	02A 311 140 A
0.725 ... 0.749	0.700	02A 311 140 B

satelettronica

Measured	Shim	
0.750 ... 0.744	0.725	02A 311 140 C
0.775 ... 0.799	0.750	02A 311 140 D
0.800 ... 0.824	0.775	02A 311 140 E
0.825 ... 0.849	0.800	02A 311 140 F
0.850 ....0.874	0.825	02A 311 140 G
0.875 ... 0.899	0.850	02A 311 140 H
0.900 ... 0.924	0.875	02A 311 140 J
0.925 ... 0.949	0.900	02A 311 140 K
0.950 ... 0.974	0.925	02A 311 140 L
0.975 ... 0.999	0.950	02A 311 140 M
1.000 ... 1.024	0.975	02A 311 140 N
1.025 ... 1.049	1.000	02A 311 140 P
1.050 ... 1.074	1.025	02A 311 140 Q
1.075 ... 1.099	1.050	02A 311 140 R
1.100 ... 1.124	1.075	02A 311 140 S
1.125 ... 1.149	1.100	02A 311 140 T
1.150 ... 1.174	1.125	02A 311 140 AA
1.175 ... 1.199	1.150	02A 311 140 AB

Measured	Shim	
bearing clearance (mm)	Thickness (mm)	Part No.
1.200 ... 1.224	1.175	02A 311 140 AC
1.225 ... 1.249	1.200	02A 311 140 AD
1.250 ... 1.274	1.225	02A 311 140 AE
1.275 ... 1.229	1.250	02A 311 140 AF
1.300 ... 1.324	1.275	02A 311 140 AG
1.325 ... 1.349	1.300	02A 311 140 02A 311 140
1.350 ... 1.374	1.325	02A 311 140 02A 311 140 A
1.375 ... 1.399	1.350	02A 311 140 A 02A 311 140 A
1.400 ... 1.424	1.375	02A 311 140 A 02A 311 140 B
1.425 ... 1.449	1.400	02A 311 140 B 02A 311 140 B
1.450 ... 1.474	1.425	02A 311 140 B 02A 311 140 C
1.475 ... 1.499	1.450	02A 311 140 C 02A 311 140 C
1,500 ... 1,524	1,475	02A 311 140 C 02A 311 140 D

Measured	Shim	
bearing clearance (mm)	Thickness (mm)	Part No.
1.525 ... 1.549	1.500	02A 311 140 D 02A 311 140 D
1.550 ... 1.574	1.525	02A 311 140 D 02A 311 140 E
1.575 ... 1.599	1.550	02A 311 140 E 02A 311 140 E
1.600 ... 1.624	1.575	02A 311 140 E 02A 311 140 F
1.625 ... 1.649	1.600	02A 311 140 F 02A 311 140 F
1.650 ... 1.674	1.625	02A 311 140 F 02A 311 140 G

Protected by copyright. Copying for private or commercial purposes, in part or in whole, is not permitted unless authorised by Volkswagen AG. Volkswagen AG does not guarantee or accept any liability with respect to the correctness of information in this document. Copyright by Volkswagen AG.
satelettronica

Private or commercial purposes, in part or in whole, is not permitted unless authorised by Volkswagen AG. Volkswagen AG does not guarantee or accept any liability with respect to the correctness of information in this document. Copyright by Volkswagen AG.

Measured	Shim	
1.675 ... 1.699	1.650	02A 311 140 G 02A 311 140 G
1.700 ... 1.724	1.675	02A 311 140 G 02A 311 140 H
1.725 ... 1.749	1.700	02A 311 140 H 02A 311 140 H
1.750 ... 1.774	1.725	02A 311 140 H 02A 311 140 J
1.775 ... 1.791	1.750	02A 311 140 J 02A 311 140 J

2.3 - Carrying out check measurement

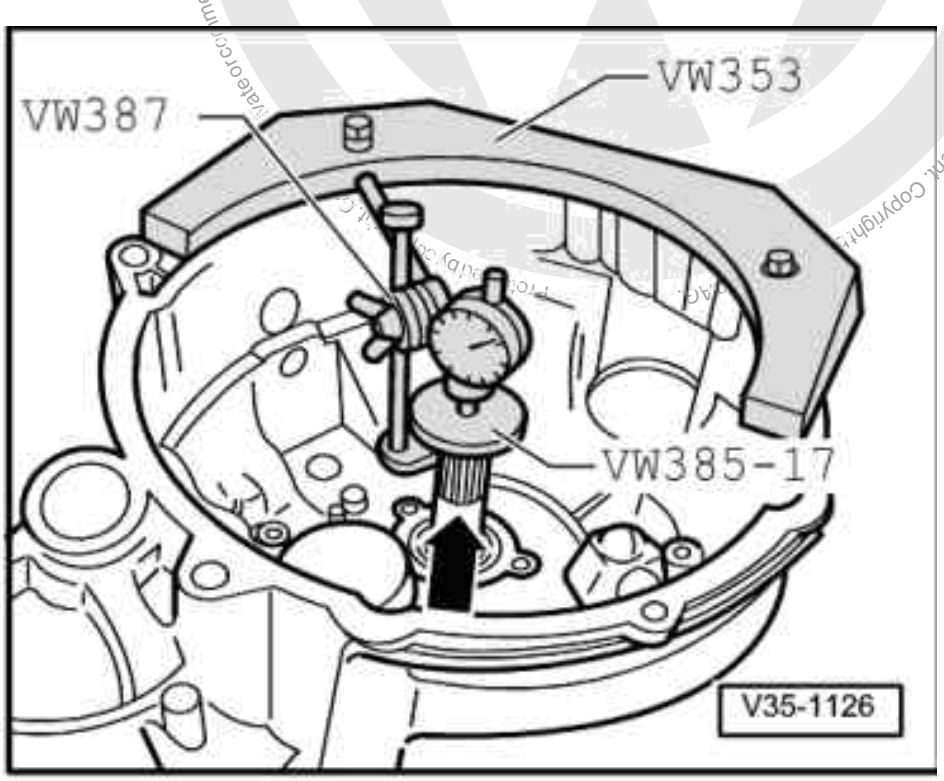

- -> Install measuring appliance and D.T.I.
- Rotate input shaft so that the taper roller bearing settles.
- Press input shaft in direction of arrow.
- Bearing play should be min. 0.01 ... max. 0.09 mm.

Note:

If the bearing clearance cannot be measured, but input shaft play is perceptible and the input shaft turns freely, the adjustment is acceptable.

satelettronica

3 - Dismantling and assembling output shaft (pinion shaft)

3.1 - Dismantling and assembling output shaft (pinion shaft)

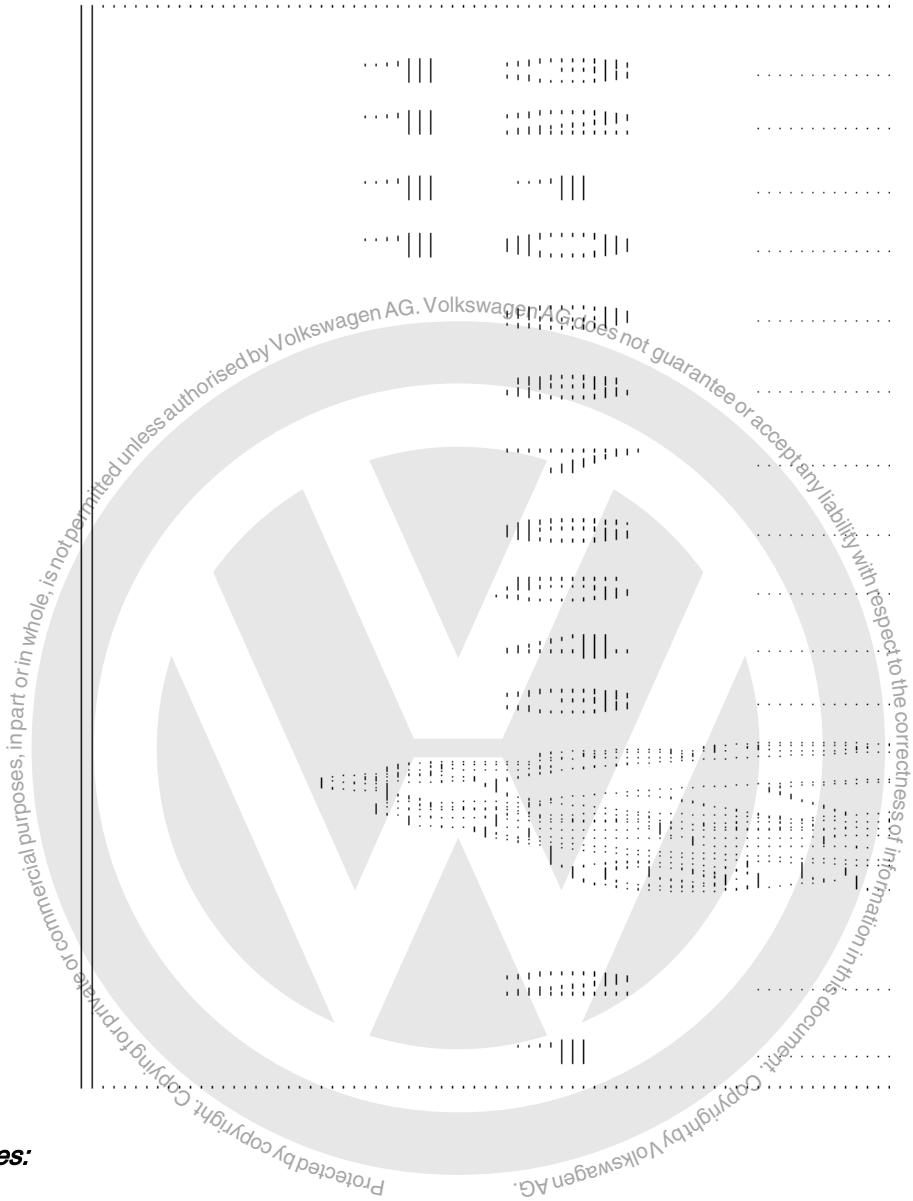

Protected by copyright. Copyright by Volkswagen AG.
Copyright by Volkswagen AG. Volkswagen AG does not guarantee or accept any liability with respect to the correctness of information in this document.
Copying for private or commercial purposes, in part or in whole, is not permitted unless authorised by Volkswagen AG.

Notes:

- The output shaft is dismantled as follows:
  - Position separating device under 2nd gear wheel (item 19) and press off as described in Fig. 5.
  - Remove circlip (item 15).
  - Position two-arm puller under bearing support (item 9) and pull off locking collar with 1st and 2nd gear synchro-hub as described in Fig. 6 .
- When installing new gear wheels or a new output shaft consult technical data =>Page 2 .

satelettronica

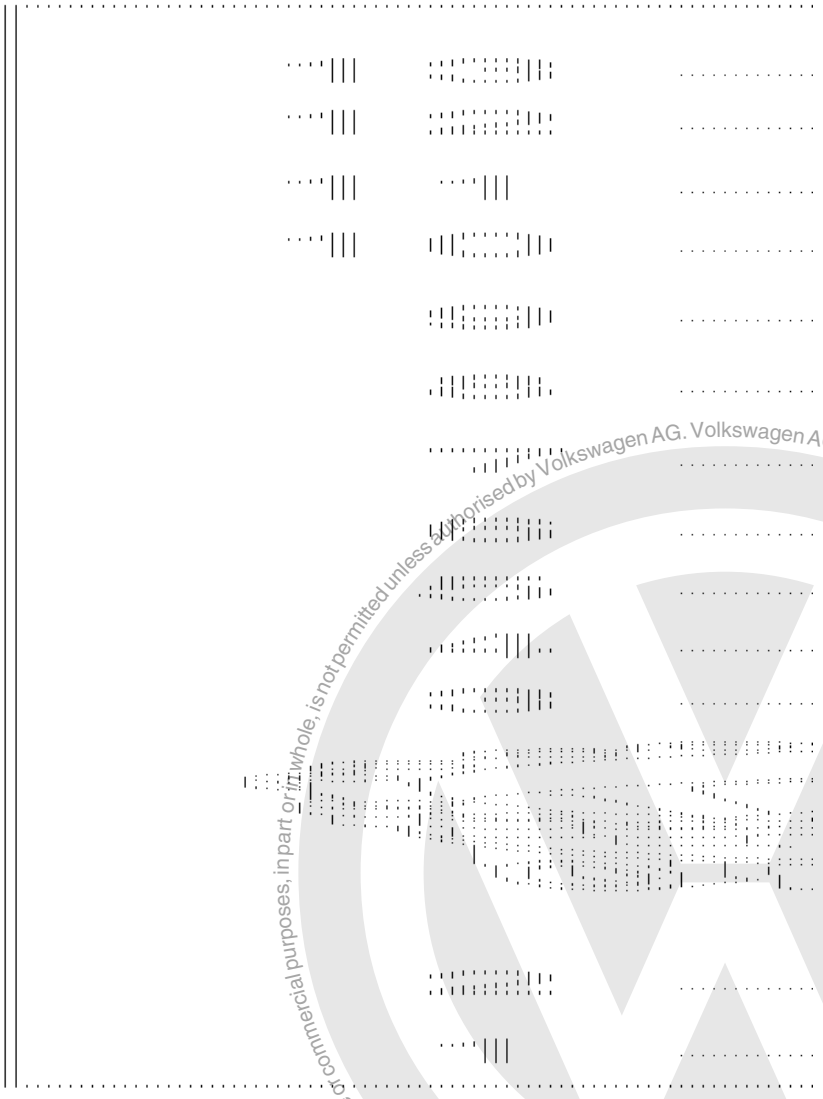

- Removing and installing output shaft
  => Page 70 .
- Both taper roller bearings must be renewed together as a set.

1 **Hexagon nut, 25 Nm and then turn 90°further**
  - 4 nuts for bearing support
2 **Clutch housing**
3 **Shim**
  - Determining thickness - adjusting output shaft => Page 146
4 **Small taper roller bearing outer race**
  - Removing => Fig. 1
  - Pressing in => Fig. 2

Protected by copyright. Copyright for private or commercial purposes, in part or in whole, is not permitted unless authorised by Volkswagen AG. Volkswagen AG does not guarantee or accept any liability with respect to the correctness of information in this document. Copyright by Volkswagen AG.
satelettronica

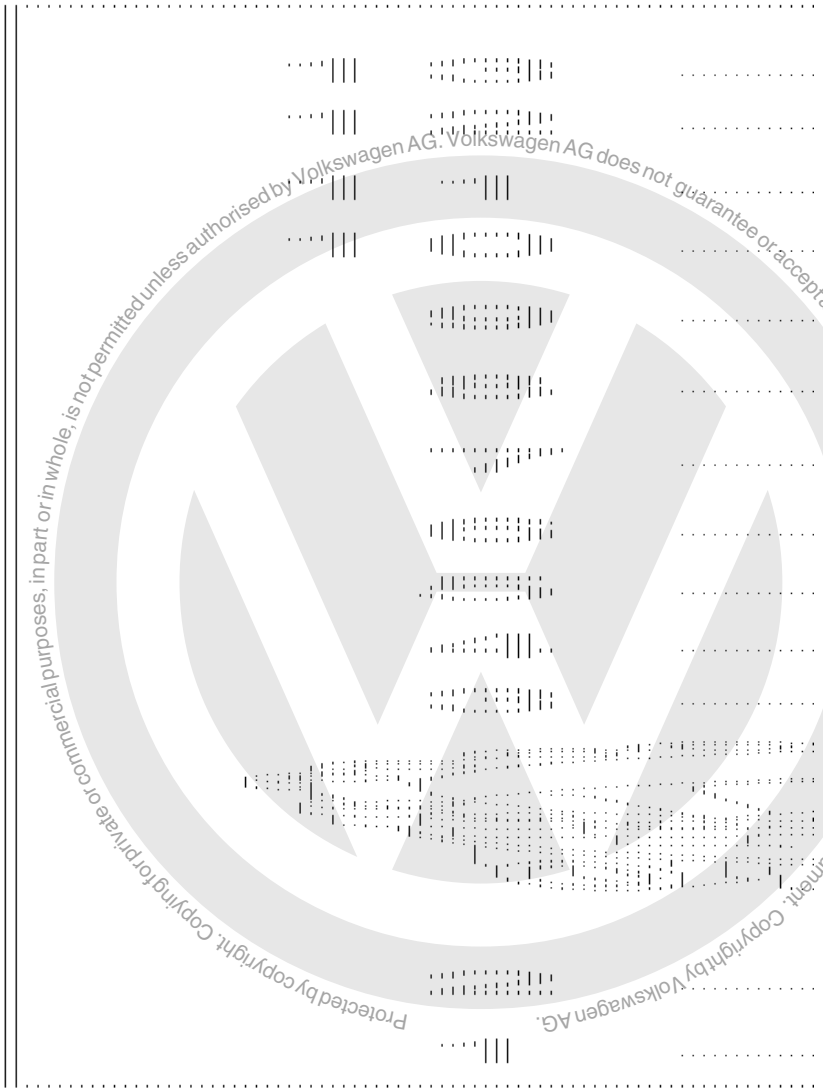

5 Small taper roller bearing inner race
- Pulling off => Fig. 3
- Pressing on => Fig. 4

6 Output shaft
- Is paired with final drive gear wheel, always renew together as a set
- Adjusting => Page 146

7 Large taper roller bearing inner race
- Pulling off => Fig. 7
- Pressing on => Fig. 8

8 Sealing ring
- Place sealing rings (Qty. 4) on the bearing support bolts

Protected by copyright. Copying for private or commercial purposes, in part or in whole, is not permitted unless authorised by Volkswagen AG. Volkswagen AG does not guarantee or accept any liability with respect to the correctness of information in this document. Copyright by Volkswagen AG.

satelettronica

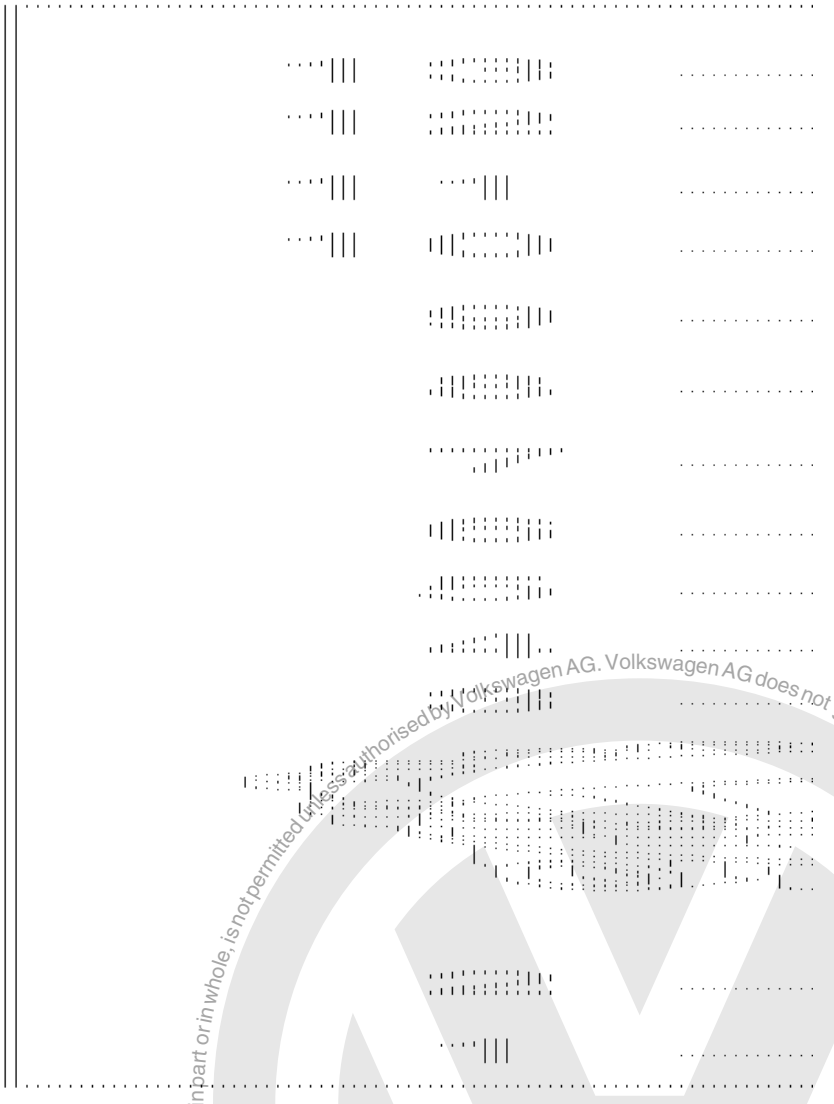

9 Bearing support
- With large taper roller bearing outer race and bolts
- Only change outer race together with large taper roller bearing and bearing support

10 Thrust washer
- Shoulder on thrust washer faces taper roller bearing

11 1st gear wheel

12 Needle roller bearing
- For 1st gear

13 1st gear synchro-ring
- Checking for wear
  => Fig. 9
- Identification => Fig. 14

Protected by copyright. Copying for private or commercial purposes, in part or in whole, is not permitted unless authorised by Volkswagen AG. Volkswagen AG does not guarantee or accept any liability with respect to the correctness of information in this document. Copyright by Volkswagen AG.
satelettronica

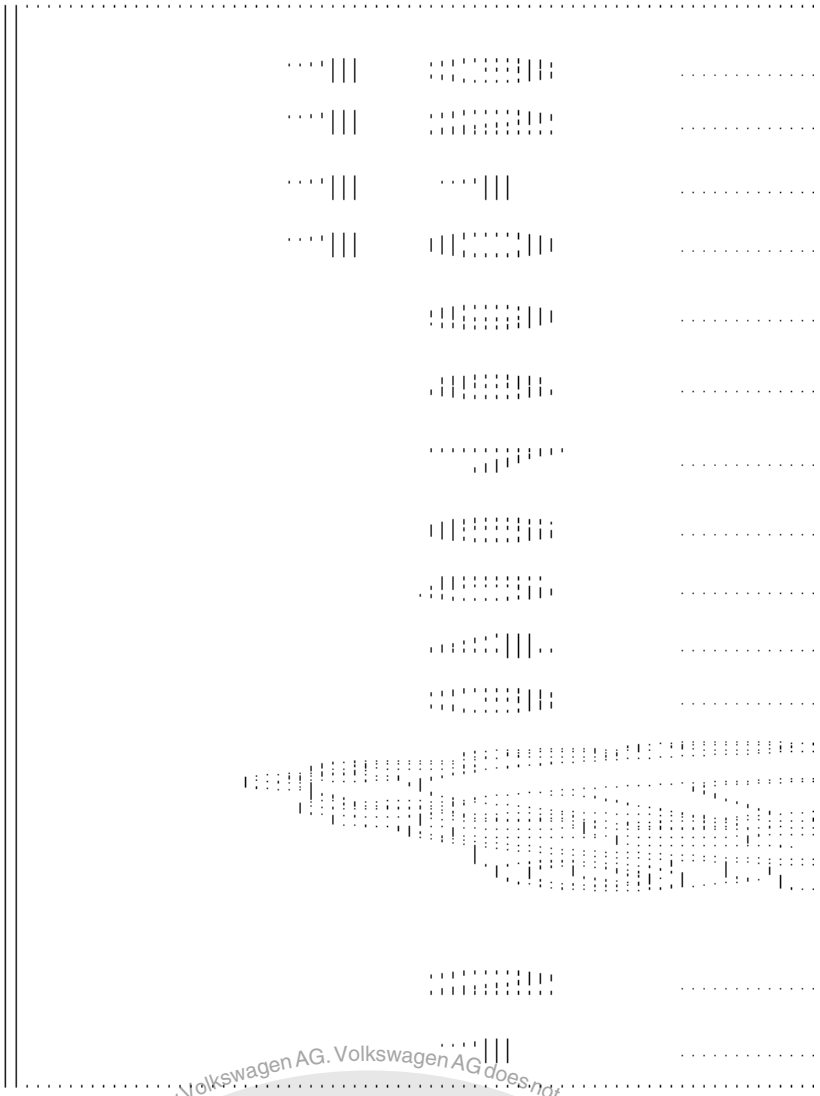

14 1st and 2nd gear locking collar with synchro-hub

- Pull off with bearing support after removing the circlip (item 15) => Fig. 6
- Dismantling => Fig. 10
- Assembling locking collar/synchro hub => Fig. 10 and Fig. 11
- Installation position => Fig. 12
- Pressing on => Fig. 13

15 Circlip

16 2nd gear synchro-ring

- Identification => Fig. 14
- Checking for wear => Fig. 16
- Assemble so that the recesses locate in the locking collar (item 14) locking pieces

Protected by copyright. Copying for private or commercial purposes, in part or in whole, is not permitted unless authorised by Volkswagen AG. Volkswagen AG does not guarantee or accept any liability with respect to the correctness of information in this document. Copyright by Volkswagen AG.

satelettronica

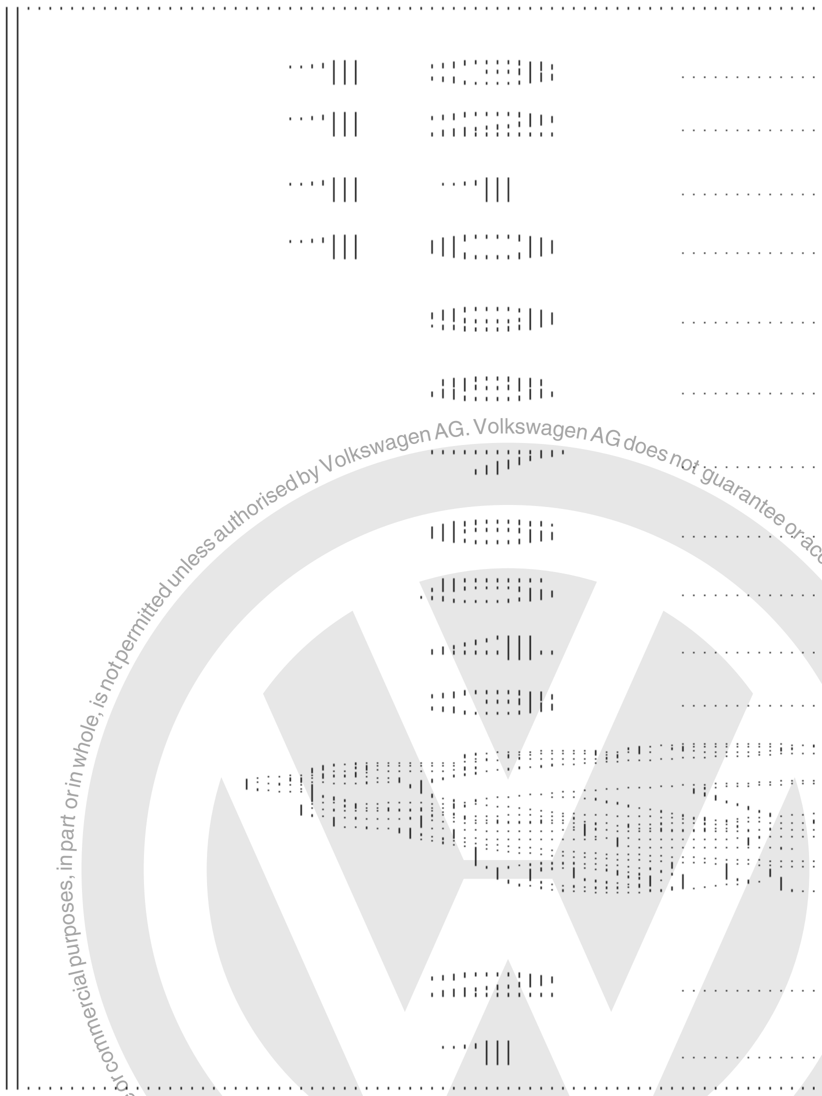

Protected by copyright. Copying for private or commercial purposes, in part or in whole, is not permitted unless authorised by Volkswagen AG. Volkswagen AG does not guarantee or accept any liability with respect to the correctness of information in this document. Copyright by Volkswagen AG.

17 Outer ring
- Insert in the synchro-ring (item 16), installation position => Fig. 17
- Renew if scored

18 Synchro-ring
- (Inner ring)
- Checking for wear => Fig. 18
- Check lugs for scoring
- Installation position => Fig. 19

19 2nd gear wheel
- Installation position => Fig. 20

20 Needle roller bearing
- For 2nd gear

satelettronica

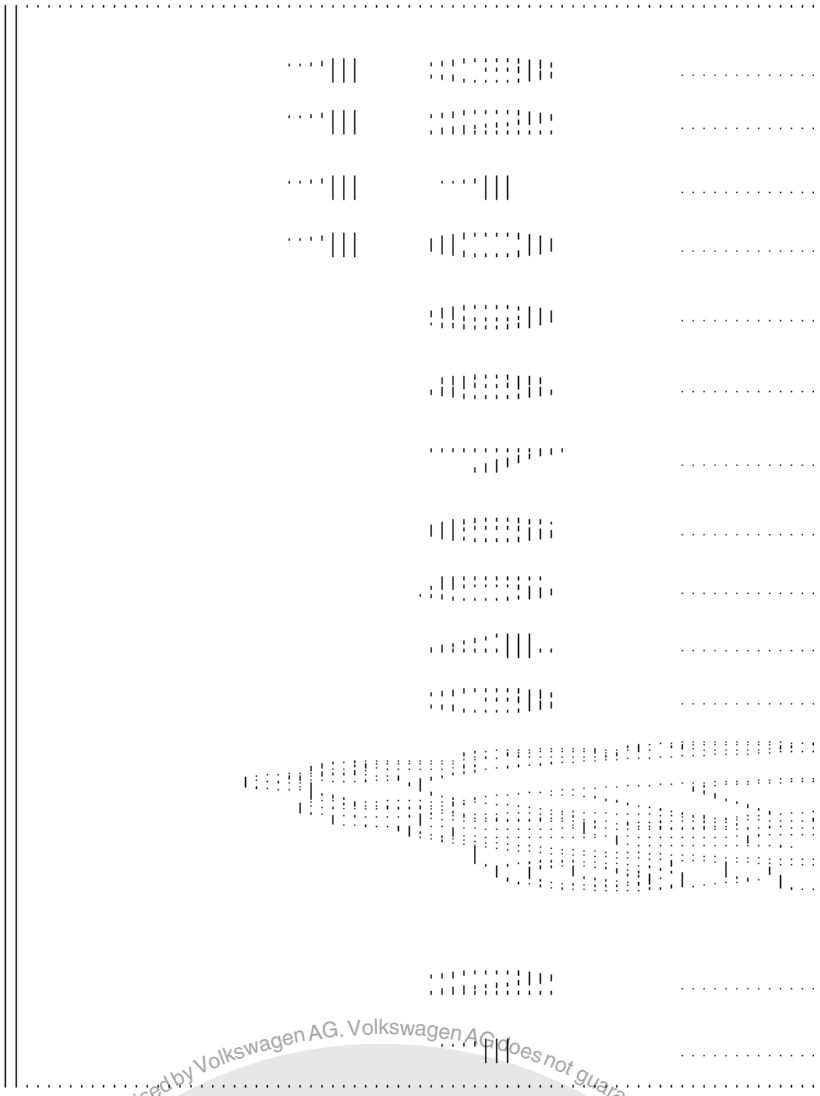

21 Thrust washer

22 Sleeve for 3rd gear needle roller bearing

- Pressing off with 2nd gear wheel => Fig. 5
- Pressing on => Fig. 21

23 Needle roller bearing

- For 3rd gear

24 3rd gear wheel

25 3rd gear synchro-ring

- Checking for wear => Fig. 9

Protected by copyright. Copying for private or commercial purposes, in part or in whole, is not permitted unless authorised by Volkswagen AG. Volkswagen AG does not guarantee or accept any liability with respect to the correctness of information in this document. Copyright by Volkswagen AG.

satelettronica

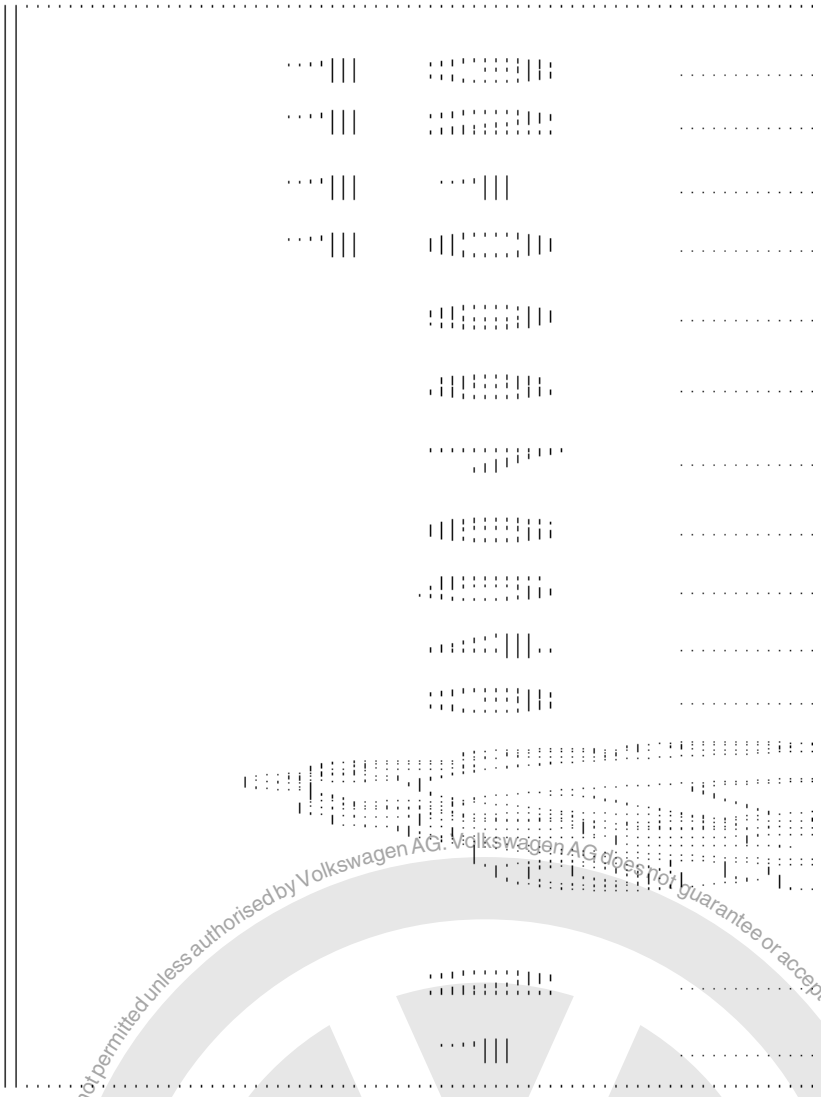

26 Locking collar with 3rd and 4th gear synchro-hub

- Press off with 2nd gear wheel (item 19) and 3rd gear wheel (item 24) => Fig. 5
- Dismantling => Fig. 22
- Installation position locking collar/synchro-hub => Fig. 24
- Assembling locking collar/synchro-hub => Fig. 22 and Fig. 23
- Pressing on => Fig. 25

27 Sleeve

- For needle roller bearing
- Press off with locking collar and 3rd and 4th gear synchro-hub (item 26) => Fig. 5
- Pressing on => Fig. 26

28 Needle roller bearing

- For 4th gear

Protected by copyright. Copying for private or commercial purposes, in part or in whole, is not permitted unless authorised by Volkswagen AG. Volkswagen AG does not guarantee or accept any liability with respect to the correctness of information in this document. Copyright by Volkswagen AG.
satelettronica

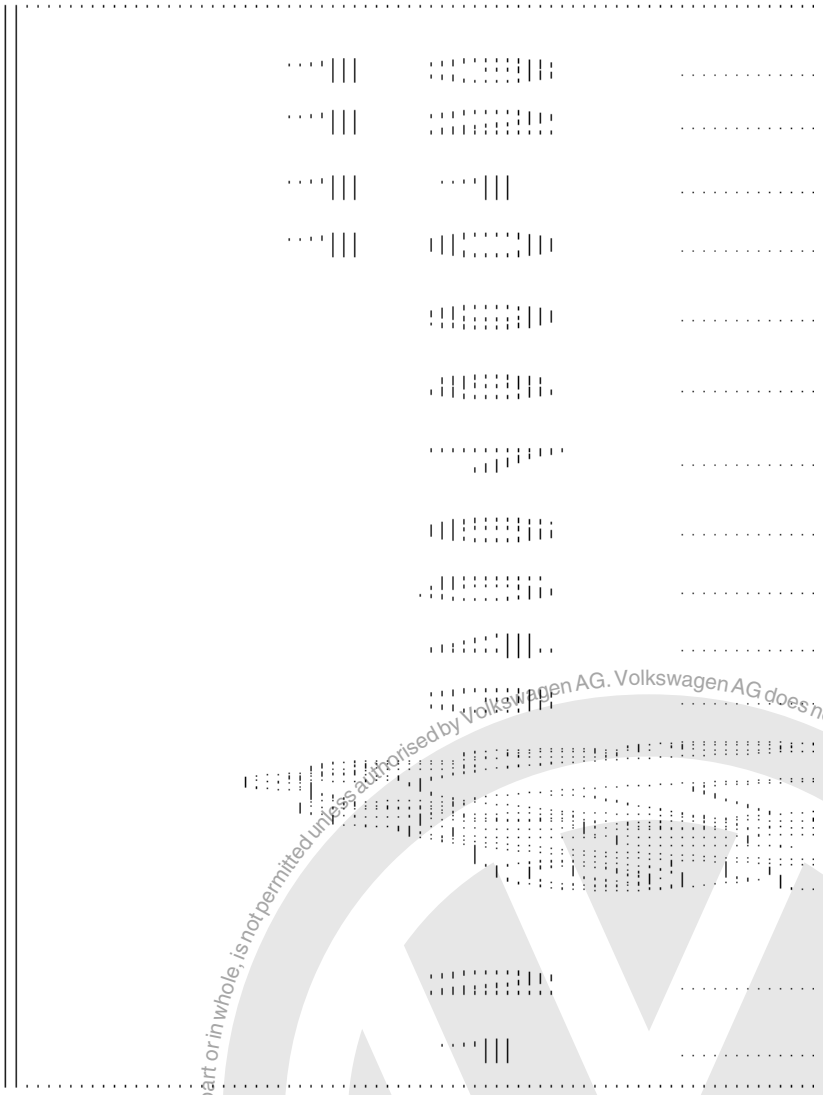

29 4th gear synchro-ring
- Checking for wear => Fig. 9

30 4th gear wheel

31 Thrust washer

32 Needle roller bearing
- For output shaft
- Removing and installing => Page 93

33 Gearbox housing

34 Sleeve
- For output shaft needle roller bearing
- Pressing off => Fig. 5
- Pressing on => Fig.27

35 5th gear wheel
- Removing and installing => Page 70

Protected by copyright. Copying for private or commercial purposes, in part or in whole, is not permitted unless authorised by Volkswagen AG. Volkswagen AG does not guarantee or accept any liability with respect to the correctness of information in this document. Copyright by Volkswagen AG.
satelettronica

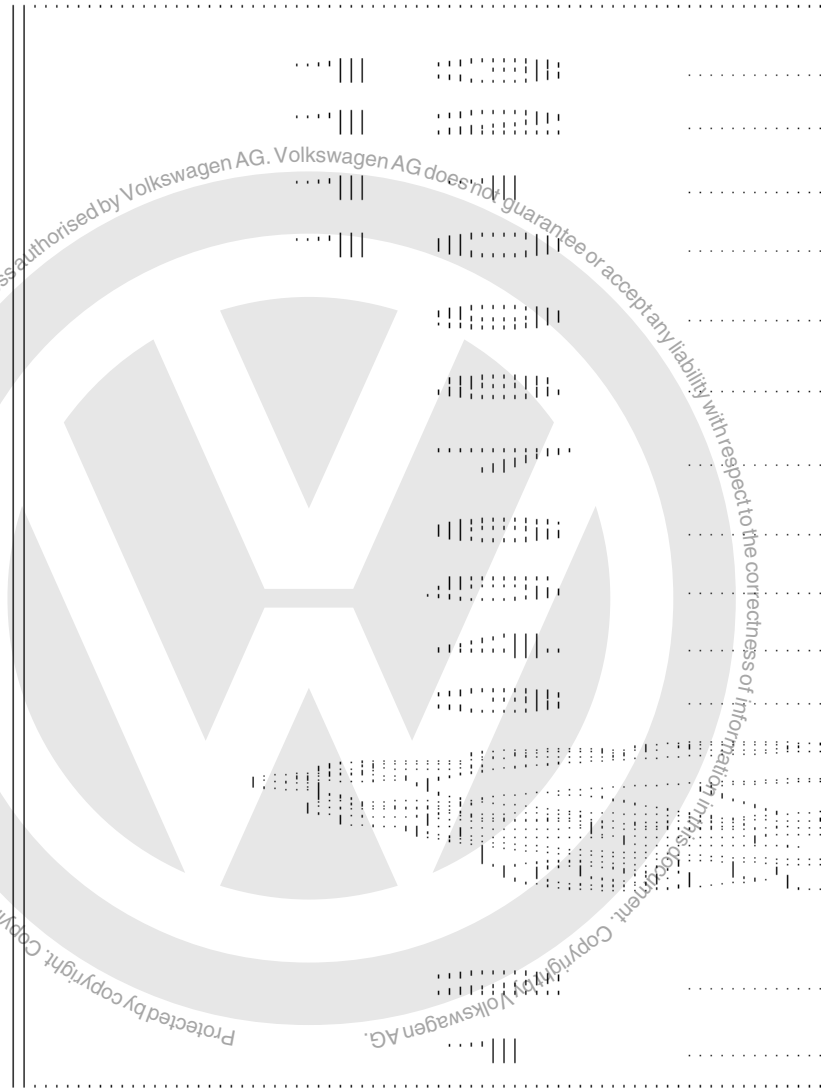

Protected by copyright. Copying for private or commercial purposes, in part or in whole, is not permitted unless authorised by Volkswagen AG. Volkswagen AG does not guarantee or accept any liability with respect to the correctness of information in this document. Copyright by Volkswagen AG.

36 Saucer spring washer

- Installation position => Page 85

37 Torx socket head bolt M10, 80 Nm

- Fitted portion on bolt head holds saucer spring washer in position

satelettronica

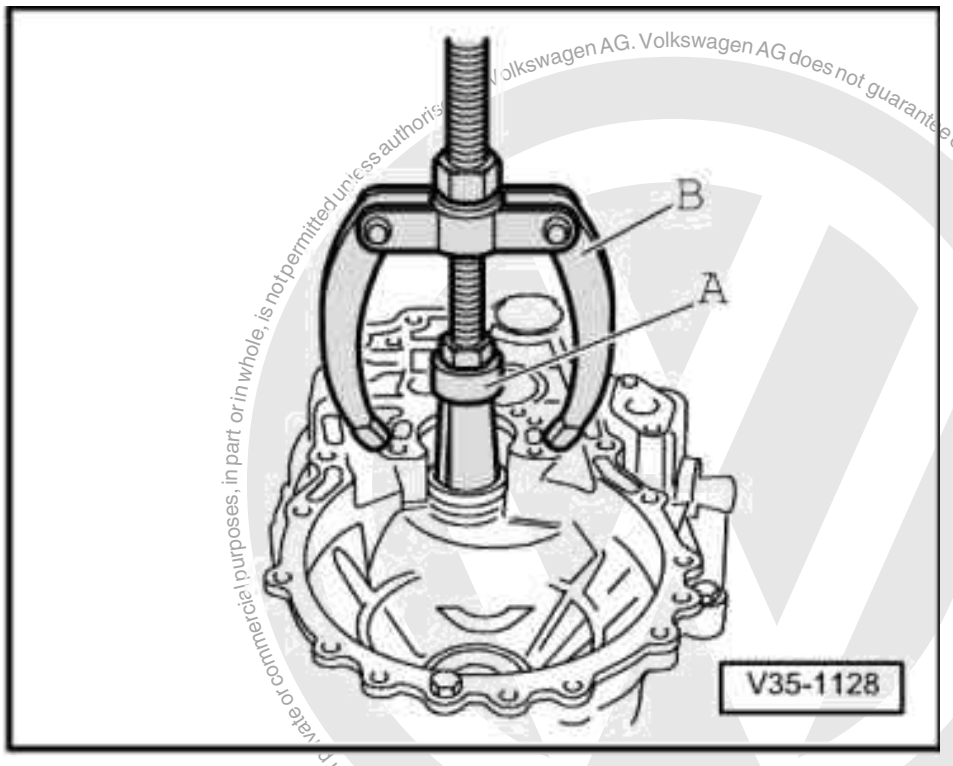

-> Fig.1 Pulling out small taper roller bearing outer race

A - Internal extractor 37 ... 46 mm, e.g. Kukko 21/6

B - Counter support, e.g. Kukko 22/2

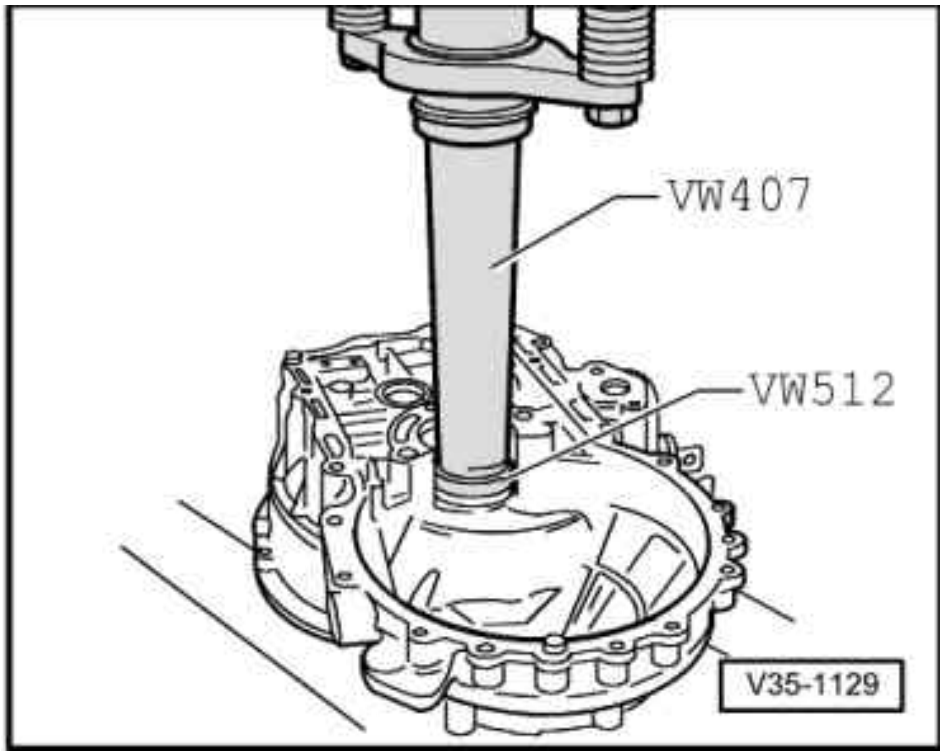

Volkswagen AG. Volkswagen AG does not guarantee or accept any liability with respect to the correctness of information in this document. Copyright by Volkswagen AG.
Protected by copyright. Copying for private or commercial purposes, in part or in whole, is not permitted unless authorised
satelettronica

-> Fig.2 Pressing in small taper roller bearing outer race

Copyright by Volkswagen AG. Volkswagen AG does not guarantee or accept any liability with respect to the correctness of information in this document. Copying for private or commercial purposes, in part or in whole, is not permitted unless authorised by Volkswagen AG.

-> Fig.3 Pulling off small taper roller bearing inner race

A - Vice clamps/vice

- Fit gripping device and tension behind bearing rollers, then turn bearing and retension gripping device.

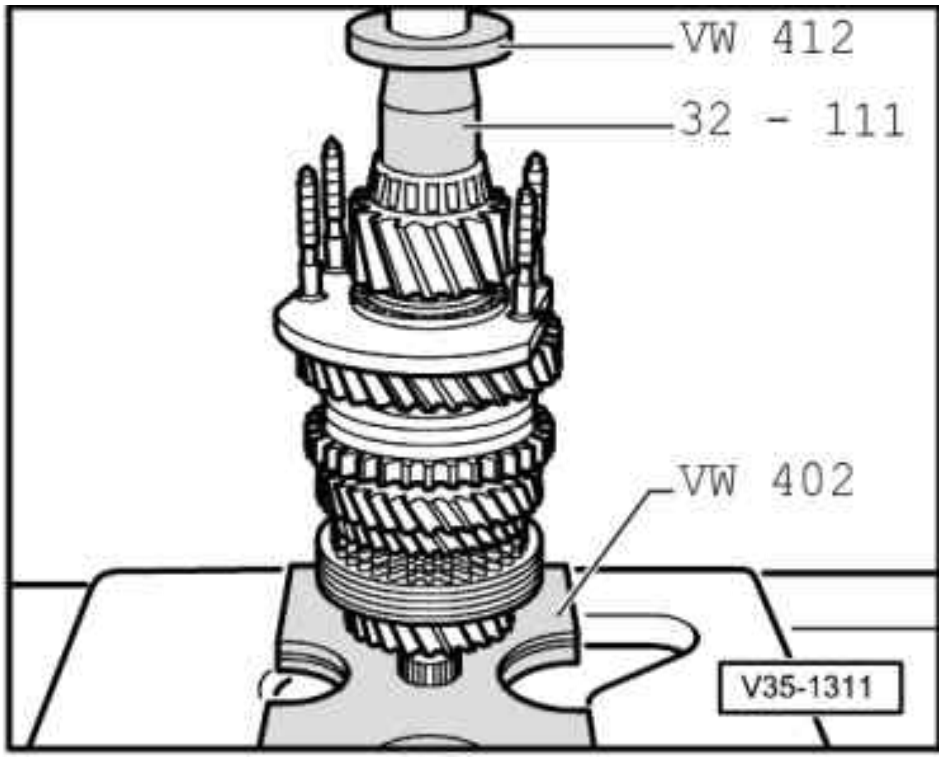

satelettronica

-> Fig.4 Pressing on small taper roller bearing inner race

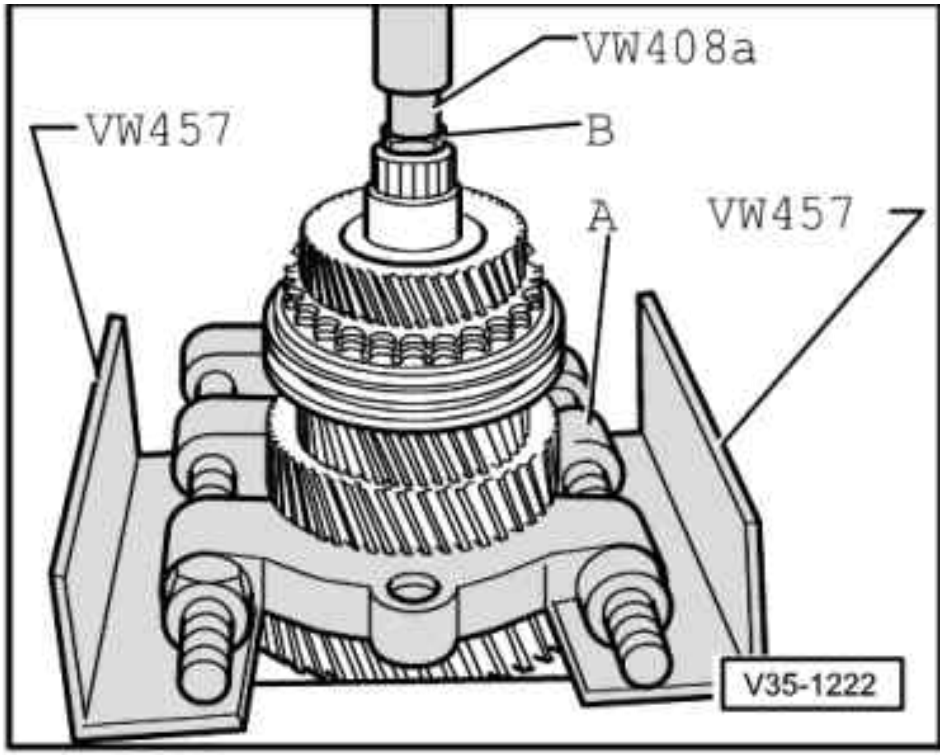

-> Fig.5 Pressing off 3rd and 4th gear synchro-hub/locking collar, 2nd, 3rd and 4th gear wheels with gearbox housing needle roller bearing sleeve

A - Separating device 22 ... 115 mm, e.g. Kukko 17/2

B - Hexagon bolt 17 mm AF - M10 x 20

Note:

Support separating appliance so that the 1st and 2nd gear locking collar is not pulled off at the same time.

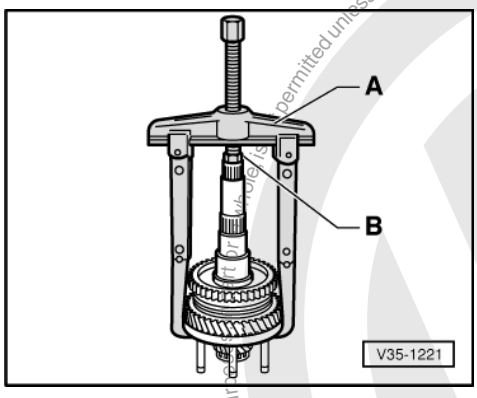

-> Fig.6 Pulling off locking collar with synchro-hub via bearing support

A - Two-arm puller, e.g. Kukko 20/10 with
250 mm reach hooks

Protected by copyright. Copying for private or commercial purposes is not permitted unless authorised by Volkswagen AG. Volkswagen AG does not guarantee or accept any liability with respect to the correctness of information in this document. Copyright by Volkswagen AG.

satelettronica

B - Hexagon bolt 17 mm AF - M10 x 20

Note:

Remove circlip before pulling off individual components.

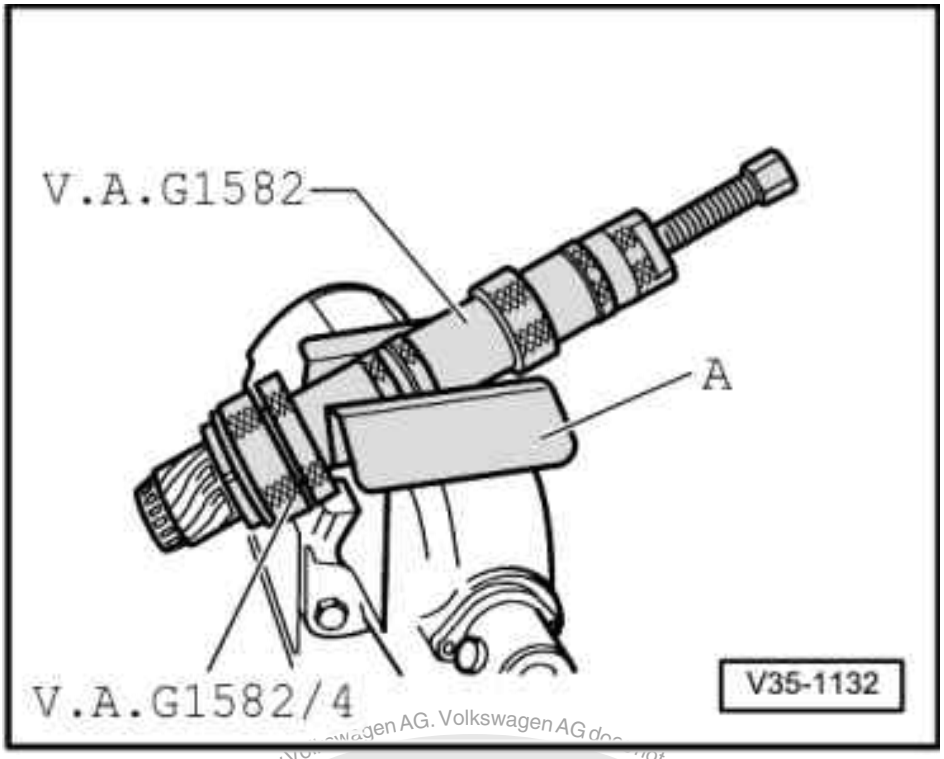

-> Fig.7 Pulling off large taper roller bearing inner race

A - Vice clamps

- Before fitting puller insert a M 10 x 20 hexagon bolt in the output shaft drilling.

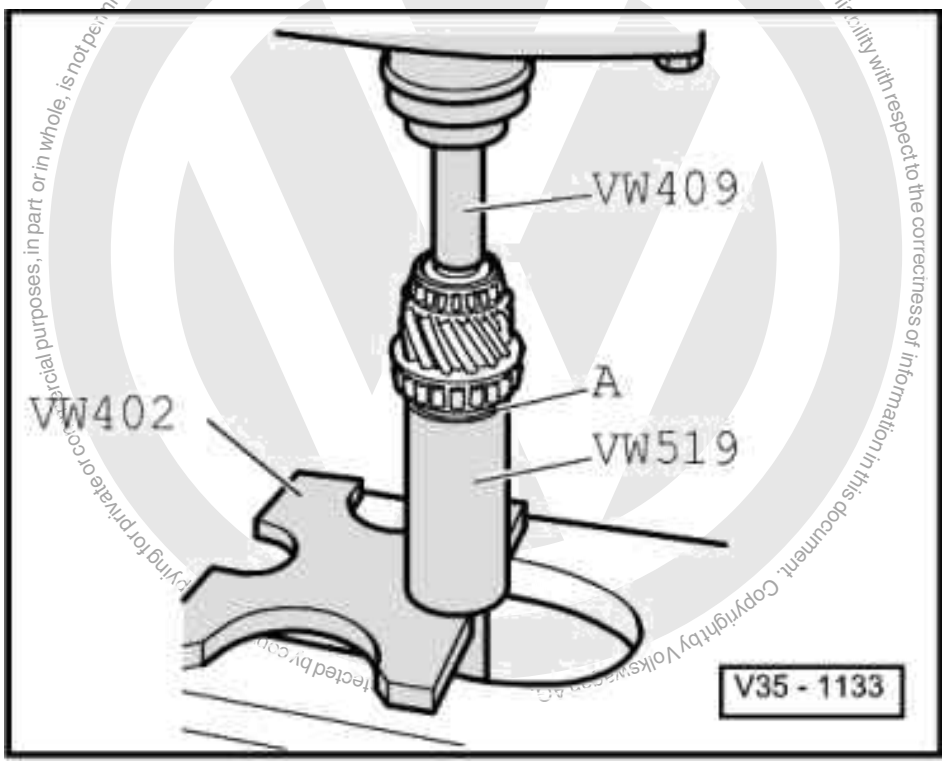

satelettronica

-> Fig.8 Pressing on large taper roller bearing inner race

A - Thrust washer

- Fit thrust washer before pressing on the inner race. The shoulder faces the inner race.

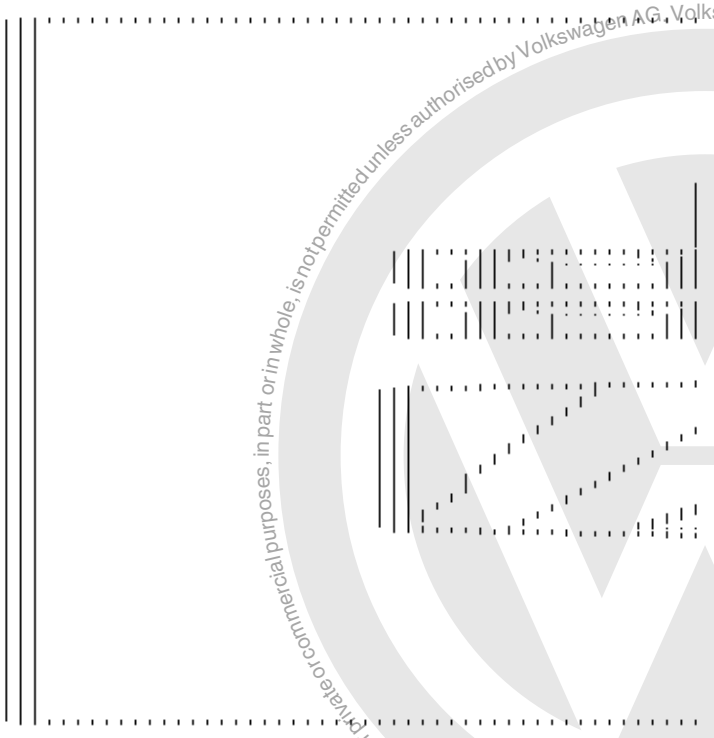

-> Fig.9 Checking synchro-ring for wear

- Press synchro-ring onto the gear wheel cone and measure gap "a" with feeler gauge.

Gap "a"	New dimension	Wear limit
1st gear 3rd gear 4th gear	1.0 ... 1.7 mm 1.0 ... 1.7 mm 1.0 ... 1.7 mm	0.5 mm

Protected copyright. Copying for private or commercial purposes, in part or in whole, is not permitted unless authorised by Volkswagen AG. Volkswagen AG does not guarantee or accept any liability with respect to the correctness of information in this document. Copyright by Volkswagen AG.
satelettronica

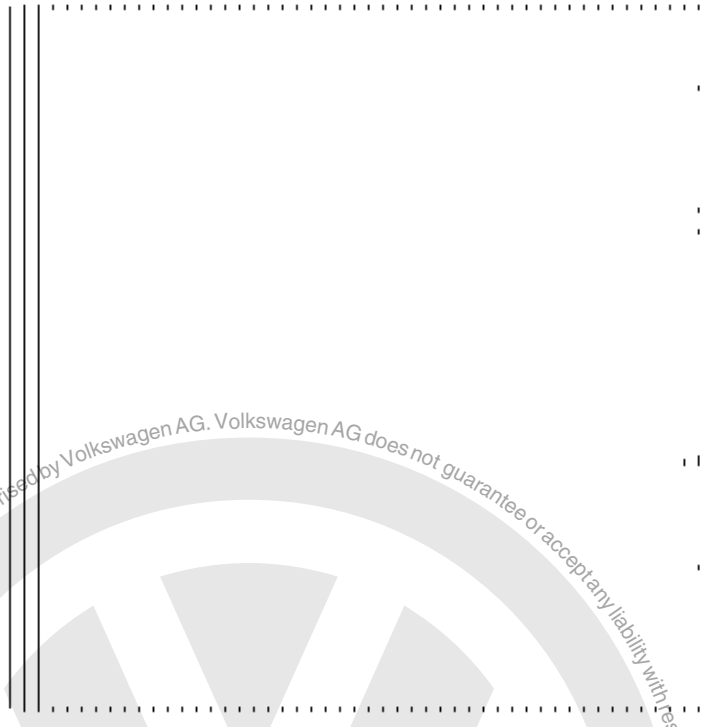

-> Fig.10 Dismantling and assembling 1st and 2nd gear locking collar and synchro-hub

1 - Spring
2 - Locking collar
3 - Synchro-hub
4 - Locking piece

- Slide locking collar over synchro-hub.

The wide shoulder of the synchro-hub (arrow A) and the outer splines of the locking collar (arrow B) face opposite directions after assembly. Recesses for locking pieces on synchro-hub and locking collar must align.

Protected by copyright. Copying for private or commercial purposes, in part or in whole, is not permitted unless authorised by Volkswagen AG. Volkswagen AG does not guarantee or accept any liability with respect to the correctness of information in this document. Copyright by Volkswagen AG.

satelettronica

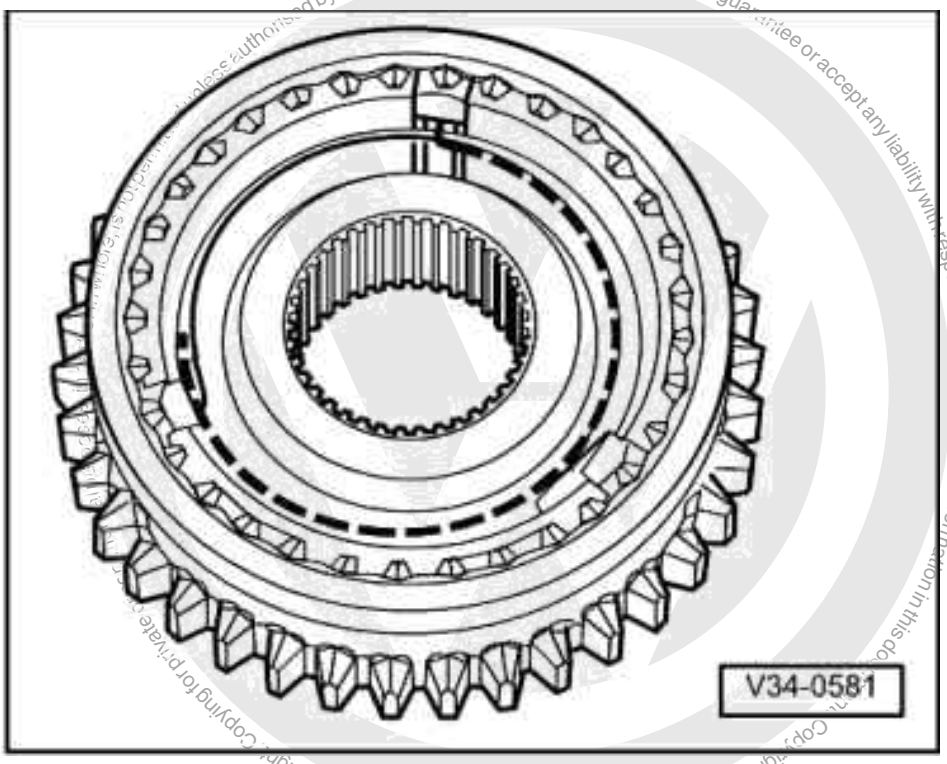

-> Fig.11 Assembling 1st and 2nd gear locking collar/synchro-hub

- Locking collar is pushed over synchro-hub.

- Insert locking pieces and install springs 120° off-set. The angled end of the spring must locate in the hollow locking piece.

satelettronica

-> Fig.12 Installation position 1st and 2nd gear locking collar/synchro-hub

The locking collar splines (arrow 1) point to splines for 3rd/4th gear synchro-hub -A-.

The wide shoulder of the synchro-hub (arrow 2) then faces to 1st gear -B-.

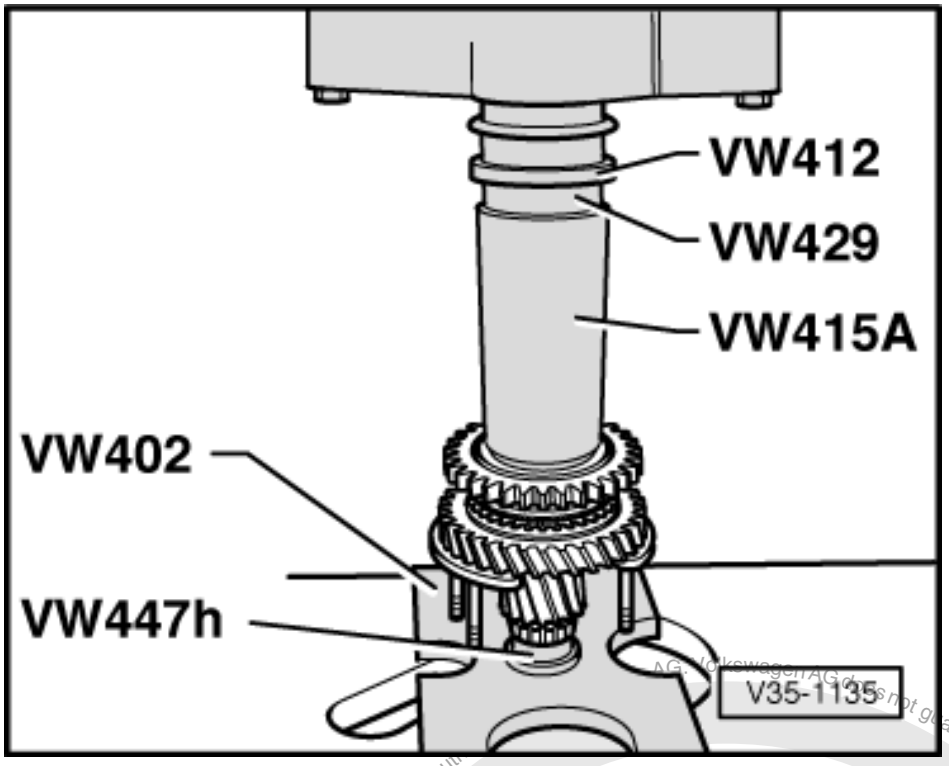

-> Fig.13 Pressing on 1st and 2nd gear locking collar/synchro-hub

Note:

Before pressing on, place 1st gear synchro-ring on 1st gear wheel.

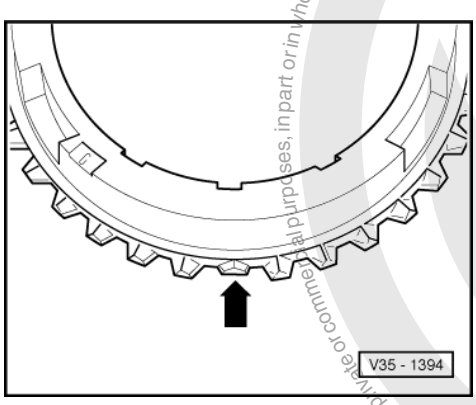

-> Fig.14 Identifying 1st and 2nd gear synchro-rings

- 1st gear synchro-ring - 3 x ground down half teeth (arrow)
- 2nd gear synchro-ring - 3 x ground down half teeth (arrow) or 2 x ground down half teeth

Only the 2nd gear synchro-ring with 2 x ground down half teeth is available as a spare part.

satelettronica

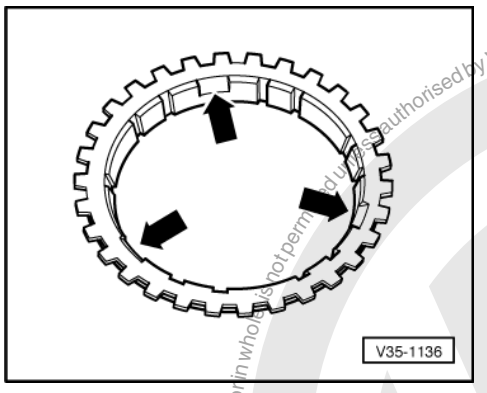

-> Fig.15 Distinguishing 1st and 2nd gear synchro-rings

- 1st gear synchro-ring - no recesses
- 2nd gear synchro-ring - three recesses (arrows)

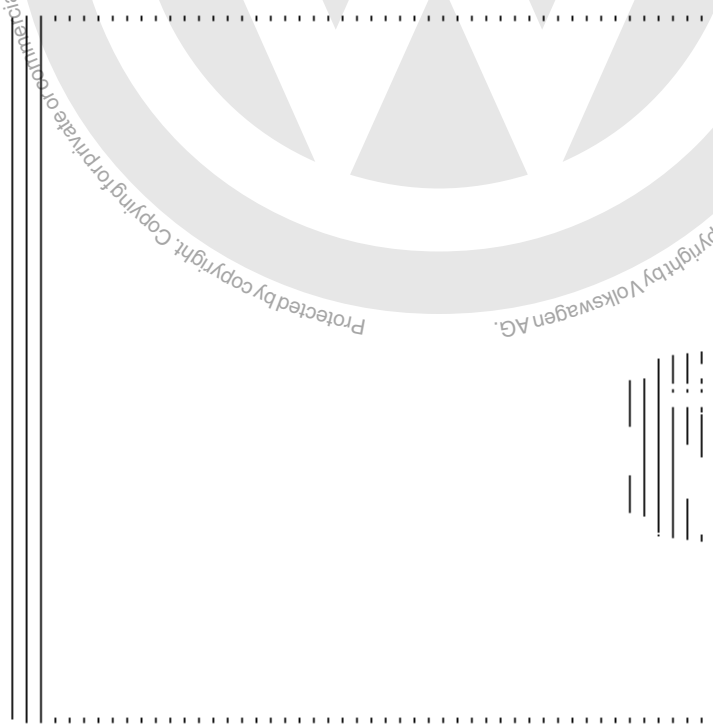

-> Fig.16 Checking 2nd gear synchro-ring for wear

- Press synchro-ring, outer-ring and inner-ring onto gear wheel cone and measure gap "a" with feeler gauge.

Gap "a"	New dimension	Wear limit
2nd gear	1.2 ... 1.8 mm	0.5 mm

Protected by copyright. Copying for private or commercial purposes, in part or in whole, is not permitted unless authorised by Volkswagen AG. Volkswagen AG does not guarantee or accept any liability with respect to the correctness of information in this document. Copyright by Volkswagen AG.

satelettronica

-> Fig.17 Installation position outer-ring

The lugs (arrows) face to 1st gear -A-

Protected by copyright. Copying for private or commercial purposes, in part or in whole, is not permitted unless authorised by Volkswagen AG. Volkswagen AG does not guarantee or accept any liability with respect to the correctness of information in this document. Copyright by Volkswagen AG.

satelettronica

Protected by copyright. Copying for private or commercial purposes, in part or in whole is not permitted unless authorised by Volkswagen AG. Volkswagen AG does not guarantee or accept any liability with respect to the correctness of information in this document. Copyright by Volkswagen AG.

-> Fig.18 Checking inner-ring for wear

- Press inner-ring onto 2nd gear wheel cone and measure gap "a" with a feeler gauge.

Gap "a"	New dimension	Wear limit
2nd gear	0.75 ... 1.25 mm	0.3 mm

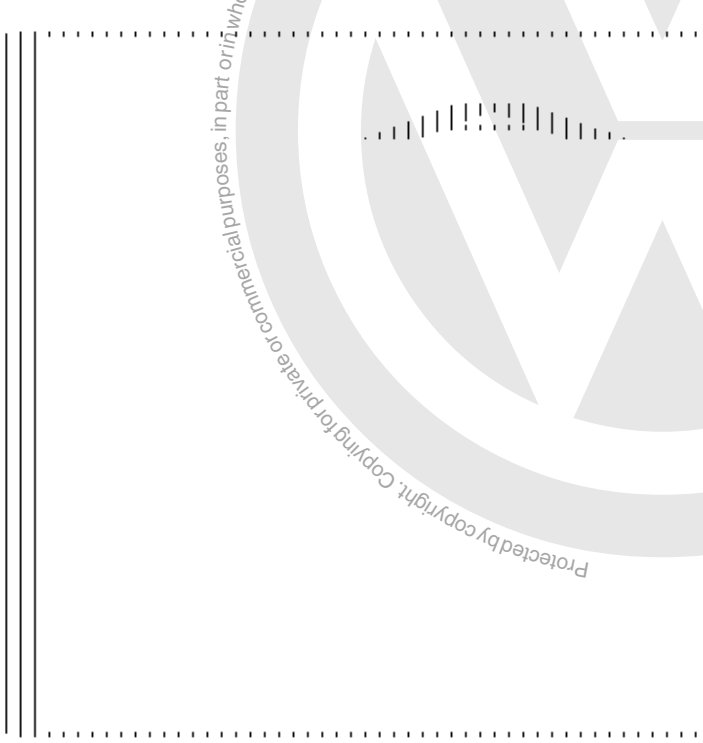

-> Fig.19 Installation position synchro-ring (inner-ring) -A-

The lugs (arrow 1) locate in the recesses (arrow 2) in the synchro-ring -B-.

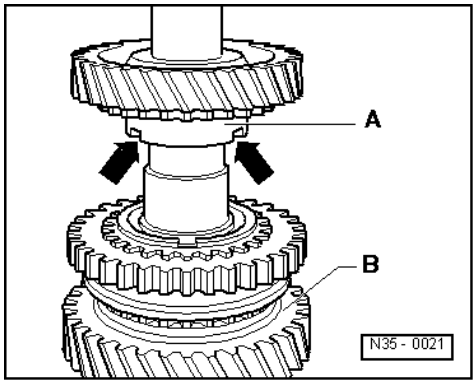

-> Fig.20 Installation position 2nd gear wheel

The higher shoulder -A- faces to 1st gear -B-. The recesses in the shoulder (arrows) locate with the lugs of the outer-ring (arrow => Fig. 17)

satelettronica

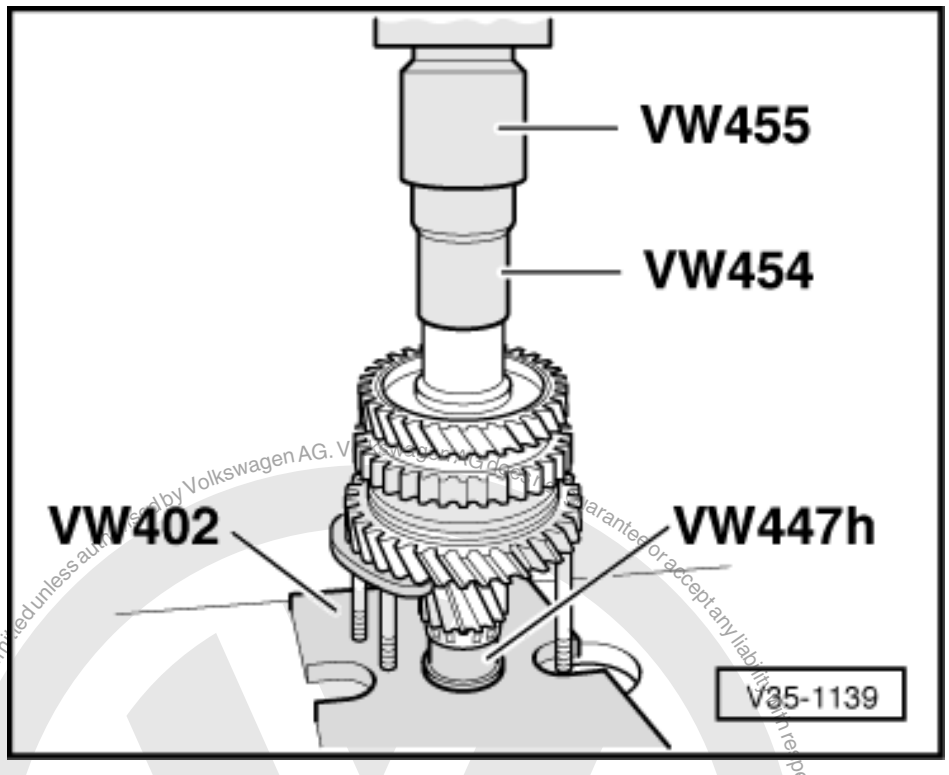

-> Fig.21 Pressing on needle roller bearing sleeve for 3rd gear

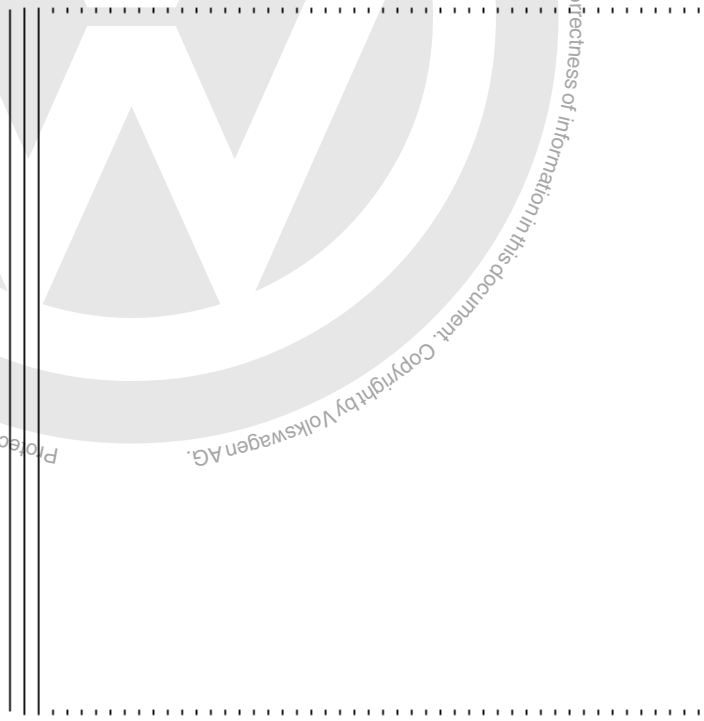

-> Fig.22 Dismantling and assembling 3rd and 4th gear locking collar and synchro-hub

1 - Spring
2 - Locking piece
3 - Locking collar

satelettronica

4 - Synchro-hub

- Slide locking collar over synchro-hub.

The recesses for locking pieces in synchro-hub and locking collar must align.

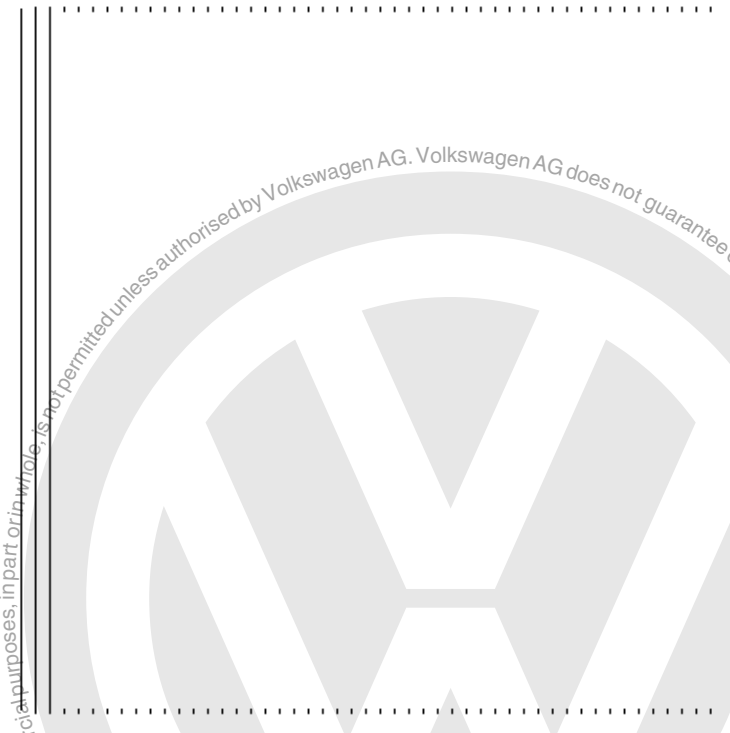

-> Fig.23 Assembling 3rd and 4th gear locking collar/synchro-hub

The locking collar has been pushed over the synchro-hub.

- Insert locking pieces and install springs 120° off-set. The angled end of the spring must locate in the hollow locking piece.

Protected by copyright. Copying for private or commercial purposes, in part or in whole, is not permitted unless authorised by Volkswagen AG. Volkswagen AG does not guarantee or accept any liability with respect to the correctness of information in this document. Copyright by Volkswagen AG.

satelettronica

Protected by copyright. Copyright by Volkswagen AG. Volkswagen AG does not guarantee or accept any liability with respect to the correctness of information in this document. Copying for private or commercial purposes, in part or in whole, is not permitted unless authorised by Volkswagen AG.

-> Fig.24 Installation position 3rd and 4th gear locking collar/synchro-hub

Chamfer (arrow) faces to 4th gear.

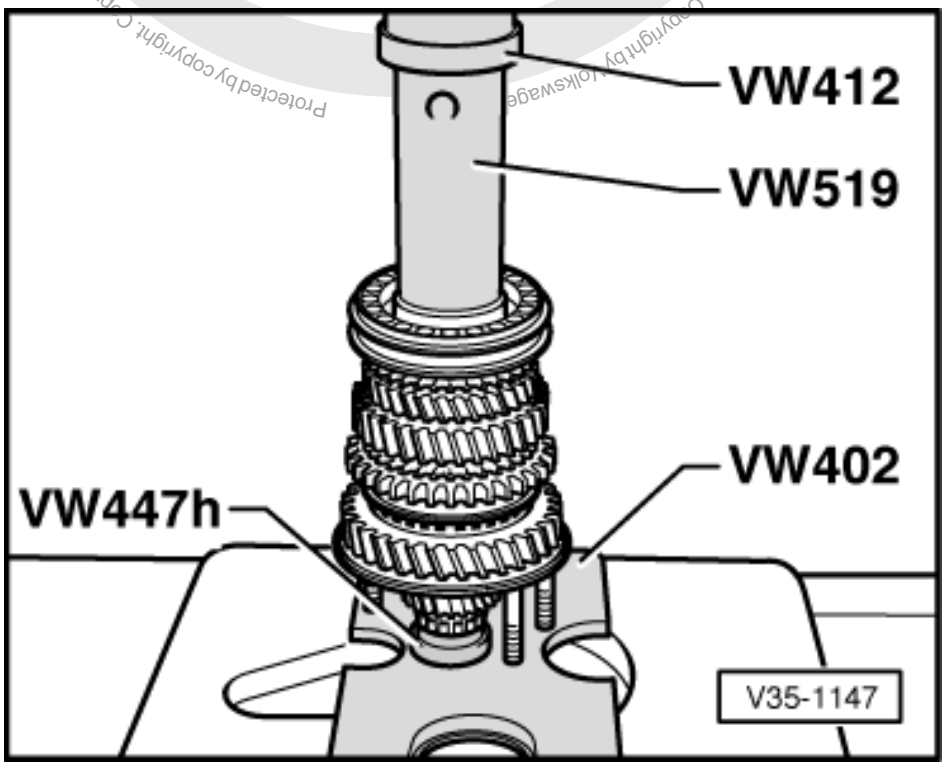

satelettronica

-> Fig.25 Pressing on 3rd and 4th gear synchro-hub with locking collar

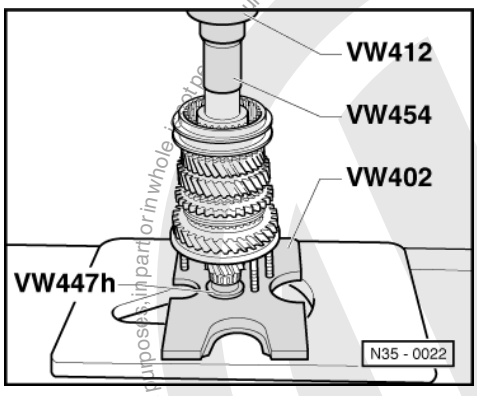

-> Fig.26 Pressing on sleeve for 4th gear needle roller bearing

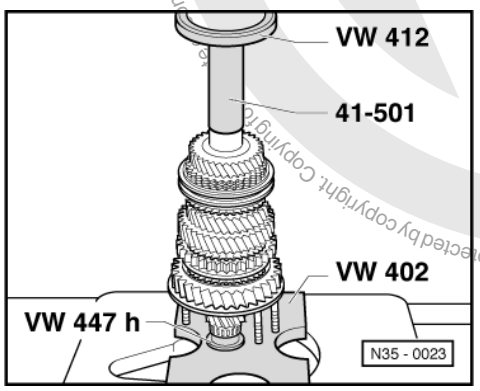

-> Fig.27 Pressing on sleeve for output shaft needle roller bearing

4 - Adjusting output shaft

4.1 - Adjusting output shaft

(Determining thickness of output shaft shim)

It is necessary to readjust the output shaft when the following components are renewed:

- Final drive
- Clutch housing

or

- Taper roller bearing

Adjustment overview => Page 173

Special tools, testers and auxiliary items

- Universal dial gauge bracket VW 387
- Measuring plate VW 385/17
- Dial gauge
- Press disc VW 512

satelettronica

- Straightening tool 3114/2

- Press small taper roller bearing outer race together with a 0.65 mm thick shim fully into clutch housing=>Page 133 .
- Insert output shaft and tighten bearing support to 25 Nm and then turn 90° further.

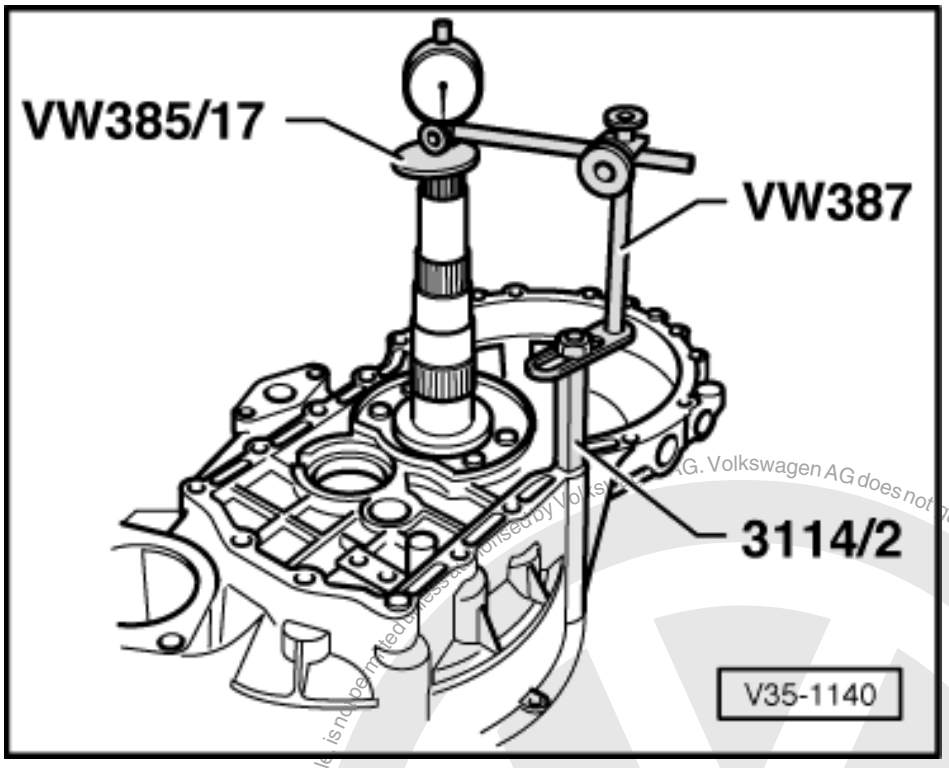

- -> Mount D.T.I. (3 mm measuring range) and "O" with 1 mm preload.
- Move output shaft up and down and note dial gauge reading (example: 0.30 mm).

Warning!
Do not rotate output shaft during measurement as this will cause the bearings to settle, resulting in incorrect reading.

Determining thickness of shim

The specified bearing preload is obtained by adding
a constant preload figure of (0.20 mm)
to the reading obtained (0.30 mm)
and the thickness of the shim installed (0.65 mm).

Example:

Shim installed	0.65 mm
+ Reading	0.30 mm
+ Preload (constant)	0.20 mm
Thickness of shim	1.15 mm

- Remove output shaft and pull out small taper roller bearing outer race => Page 132

The following adjustment shims are available:

Size (mm)	Part No.
0.65	020 311 391 P
0.70	020 311 391 Q

satelettronica

Size (mm)	Part No.
0.75	020 311 391
0.80	020 311 391 A
0.85	020 311 391 B
0.90	020 311 391 C
0.95	020 311 391 D
1.00	020 311 391 E
1.05	020 311 391 F
1.10	020 311 391 G
1.15	020 311 391 H
1.20	020 311 391 J
1.25	020 311 391 K
1.30	020 311 391 L
1.35	020 311 391 M
1.40	020 311 391 N

Varying tolerances make it possible by measuring the shims to obtain the exact shim thickness required.

- Press in small taper roller bearing outer race together with the correct shim (in example 1.15 mm) (=>Page 133) and install output shaft. Tighten bearing support nuts in clutch housing to 25 Nm and then turn 90° further.

Protected by copyright. Copyright by Volkswagen AG.
Copyright by Volkswagen AG. Volkswagen does not guarantee or accept any liability with respect to the correctness of information in this document.
Protected by copyright. Copying for private or commercial purposes, in part or in whole, is not permitted unless authorised by Volkswagen AG.
satelettronica

5 - Dismantling and assembling reverse shaft

5.1 - Dismantling and assembling reverse shaft

Protected by copyright. Copying for private or commercial purposes, in part or in whole, is not permitted unless authorised by Volkswagen AG. Volkswagen AG does not guarantee or accept any liability with respect to the correctness of information in this document. Copyright by Volkswagen AG.
satelettronica

Note:

After dismantling, always renew needle roller bearing in clutch housing and reverse shaft support.

1 Clutch housing
2 Needle roller bearing
- Pulling out => Fig. 1
- Pressing in => Fig. 2

3 Reverse gear wheel
4 Circlip
- Always renew after removing

Protected by copyright. Copyright by Volkswagen AG.
Copyright by Volkswagen AG. Volkswagen AG does not guarantee or accept any liability with respect to the correctness of information in this document.
Copying for private or commercial purposes, in part or in whole, is not permitted unless authorised by Volkswagen AG.

5 Reverse sliding gear wheel
- Before replacing remove circlip
- Shoulder faces to reverse gear wheel

6 Reverse shaft
- Removing => Page 70

7 Needle roller bearing
- Pressing out => Fig. 3
- Pressing in => Fig.4

8 Reverse shaft support
- Removing and installing
  => Page 70

satelettronica

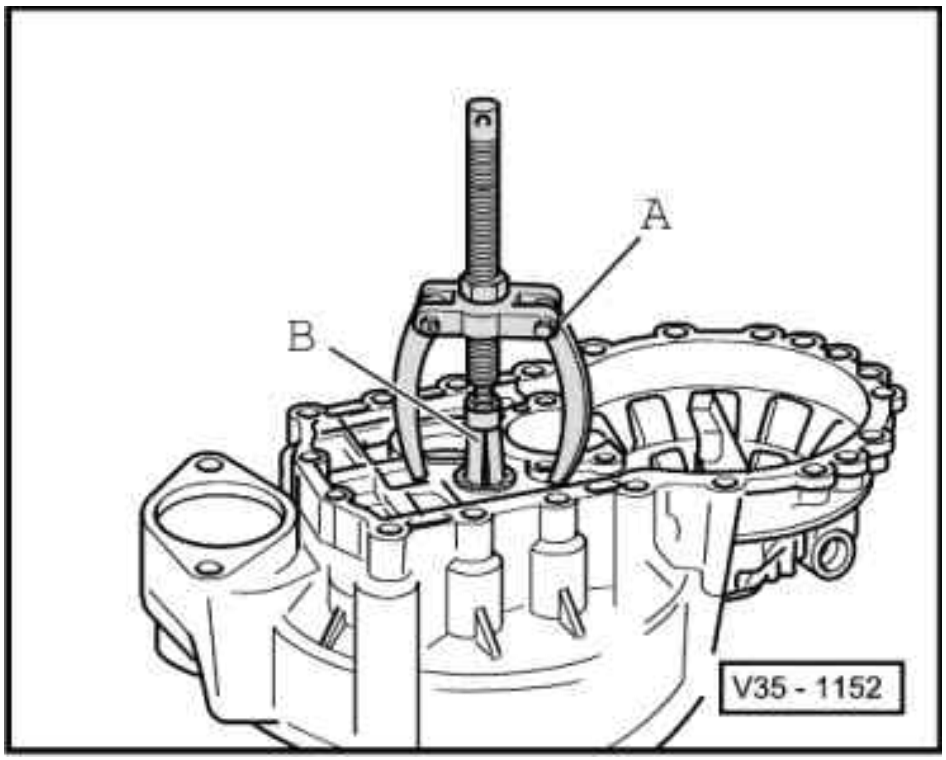

-> Fig.1 Pulling needle roller bearing out of clutch housing

A - Counter support, e.g. Kukko 22/1

B - Internal extractor 14.5 ... 18.5 mm, e.g. Kukko 21/2

Note:

The needle bearing is destroyed during removal and must be renewed.

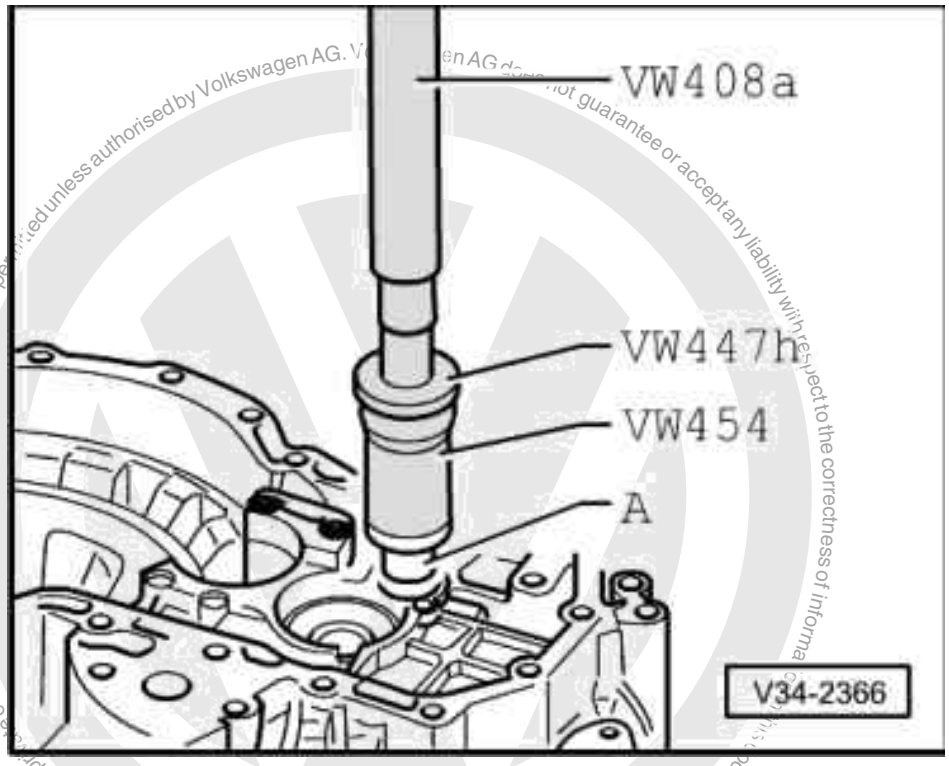

satelettronica

-> Fig.2 Pressing needle roller bearing -A- into clutch housing

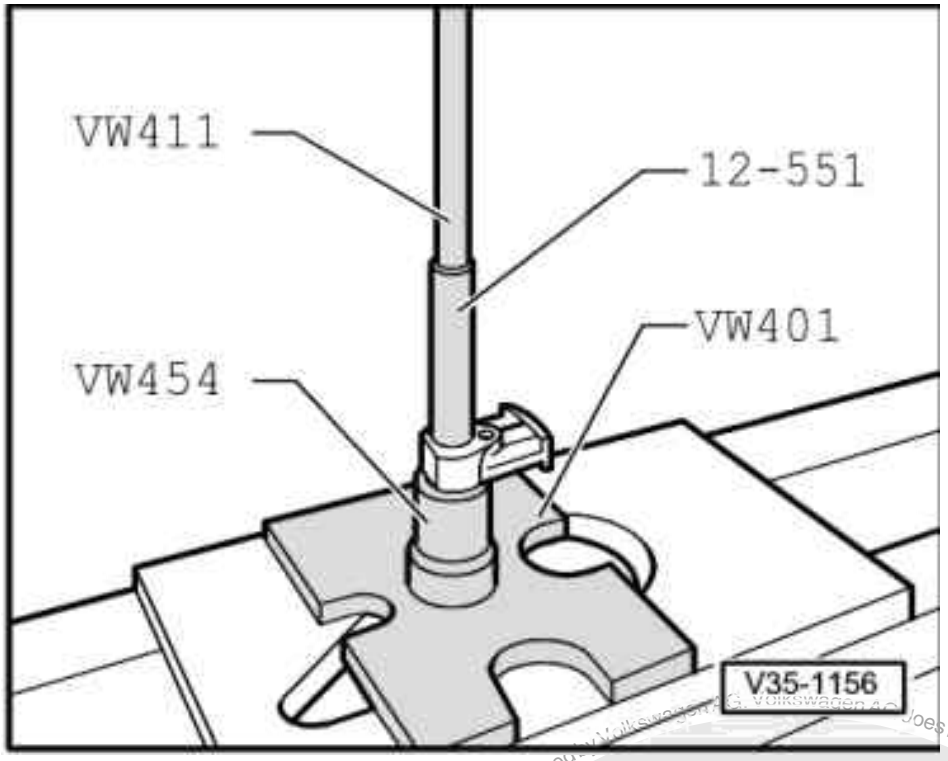

-> Fig.3 Pressing needle roller bearing out of the reverse shaft support

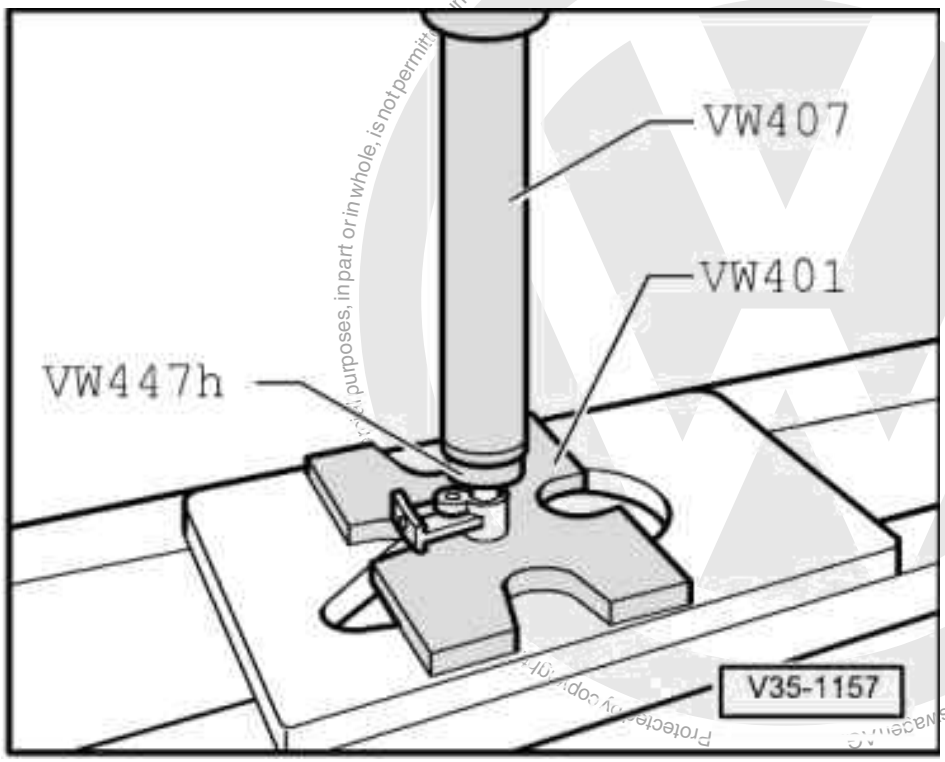

-> Fig.4 Pressing needle roller bearing into reverse shaft support

satelettronica

39 - Final drive, Differential

1 - Renewing flanged shaft oil seals (gearbox installed)

1.1 - Renewing flanged shaft oil seals (gearbox installed)

1.2 - Renewing oil seals on gearboxes without springs behind flanges

- Observe general repair instructions
  => Page 5 .

Special tools, testers and auxiliary items

◆ Drive sleeve 2035

Removing

◆ Before replacing left-hand oil seal:

- Remove drive shaft

=> Running gear; Repair group 40

◆ Before replacing right-hand oil seal:

- Turn steering to right onto full lock stop.
- Remove drive shaft protective cover from engine.
- Disconnect drive shaft from flanged shaft.

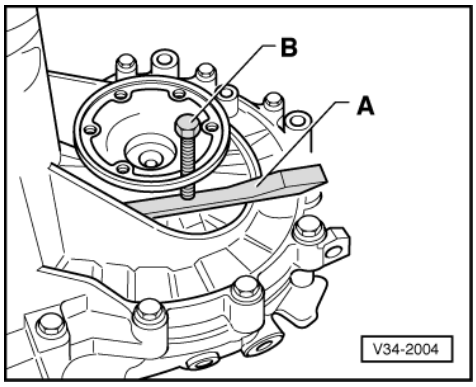

- Tie-up drive shaft as high as possible. Do not damage paint on drive shaft.
- -> Place a chisel or distance piece -A- under the flange shaft and pull flange shaft out of the sun wheels by turning bolt -B-.

Note:

If when removing the flange shaft it does not come out square, insert a bolt in the opposite hole to assist removal.

satelettronica

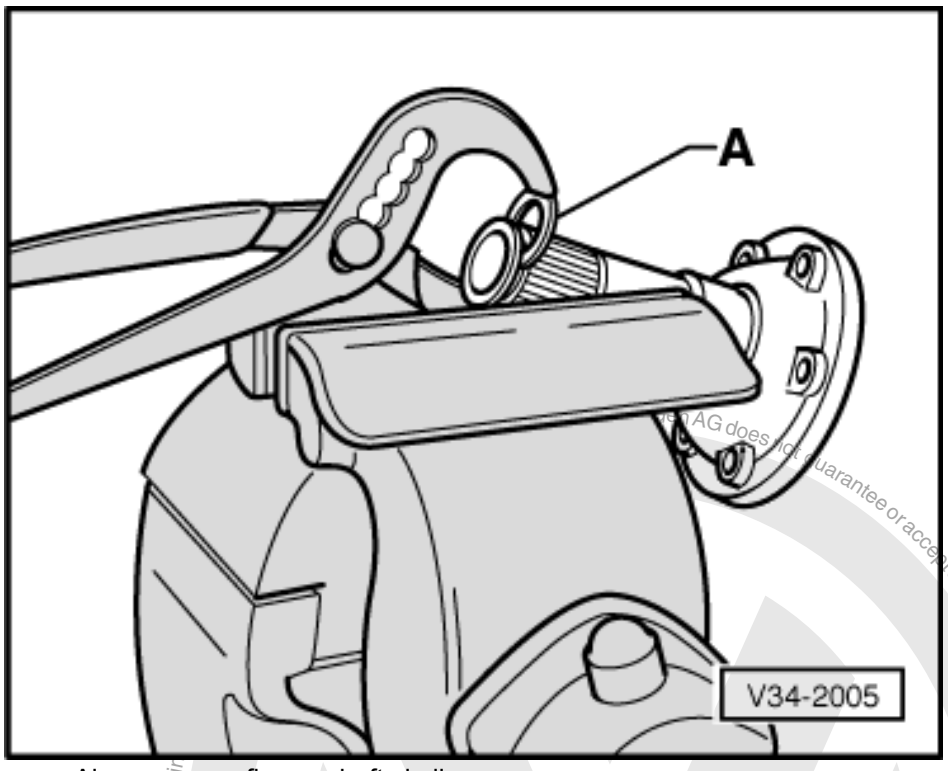

- -> Always renew flange shaft circlip.
- Clamp flange shaft in vice, using vice clamps. Use new circlip -A- to press old circlip out of groove in flange shaft.
- Pull out flange shaft oil seal with VW 681.

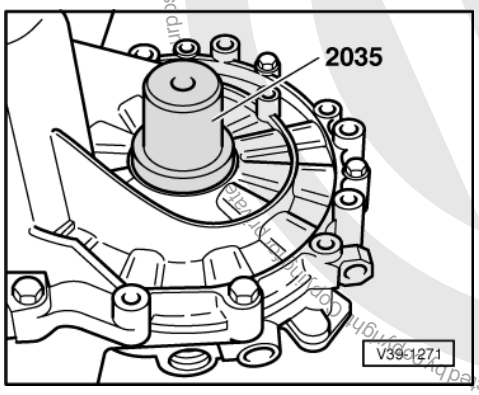

Installing

- -> Knock new flange shaft oil seal in flush, do not cant seal when doing this.
- Fill space between sealing and dust lips with multi-purpose grease.
- Knock flange shaft in with drift VW 295.
- Install left-hand drive shaft or reconnect right-hand drive shaft to flange shaft.
- Bolt on drive shaft protective cover if required.
- Top up gear oil => Page 58

Tightening torques

Drive shaft to flange shaft	45 Nm
Drive shaft protective cover to engine	35 Nm

1.3 - Renewing oil seal on gearboxes with springs behind flanges

- Observe general repair instructions

Protected by copyright. Copyright by Volkswagen AG. Volkswagen AG does not guarantee or accept any liability with respect to the correctness of information in this document.
satelettronica

=> Page 5 .

Special tools, testers and auxiliary items

- Multi-purpose tool VW 771
- Puller hooks VW 771/37
- Drift VW 3106

Removing

- Before replacing left-hand oil seal:

- Remove drive shaft

=> Repair group 40; removing and installing drive shaft removing and installing drive shaft

- Before replacing right-hand oil seal:

- Turn steering to right onto full lock stop.
- Remove drive shaft protective cover from engine.
- Disconnect drive shaft from flanged shaft.
- Tie-up drive shaft as high as possible. Do not damage paint on drive shaft.

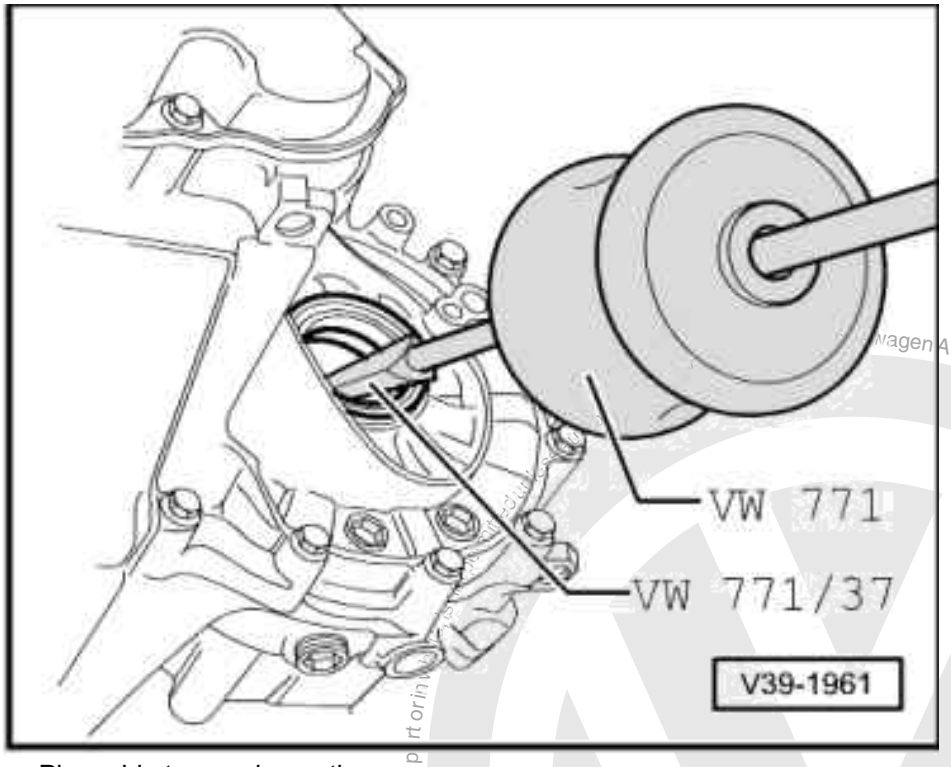

- Place drip tray underneath.
- Remove flange shaft cone head bolt, counterhold with drift.
- Remove flanged shaft with spring.
- -> Pull out seal.

Notes:

- Do not damage sleeve, otherwise leaks will occur.
- Replace sleeve if damaged
  => Page 95 .

satelettronica
Volkswagen AG does not guarantee or accept any liability with respect to the correctness of information in this document. Copyright by Volkswagen AG.
Protected by copyright. Copying for private or commercial purposes, in part or in whole, is not permitted unless authorized by Volkswagen AG.

Installing

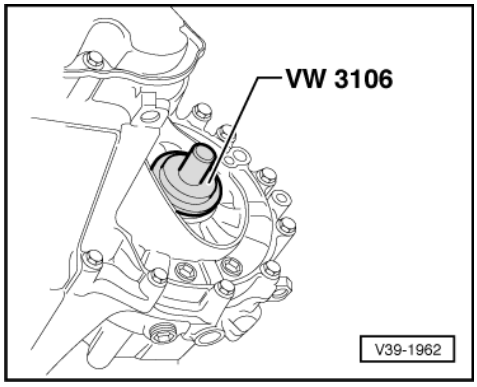

- -> Drive seal into sleeve onto stop, when doing this do not cant seal.
- Fill space between sealing lip and dust lip with multi-purpose grease.
- Insert drive shaft.
- Install cone head bolt into flange shaft threaded piece.

- Install left-hand drive shaft or attach right-hand drive shaft to flange shaft.
- Install drive shaft protective cover if necessary.
- Top up gearbox oil => Page 58 .

Tightening torques

Flange shaft to gearbox (cone head bolt)	25 Nm
Drive shaft to flange shaft	45 Nm
Drive shaft protective cover to engine	35 Nm

Protected by copyright. Copying for private or commercial purposes, in part or in whole, is not permitted unless authorised by Volkswagen AG. Volkswagen AG does not guarantee or accept any liability with respect to the correctness of information in this document. Copyright by Volkswagen AG.
satelettronica

2 - Dismantling and assembling differential

2.1 - Dismantling and assembling differential

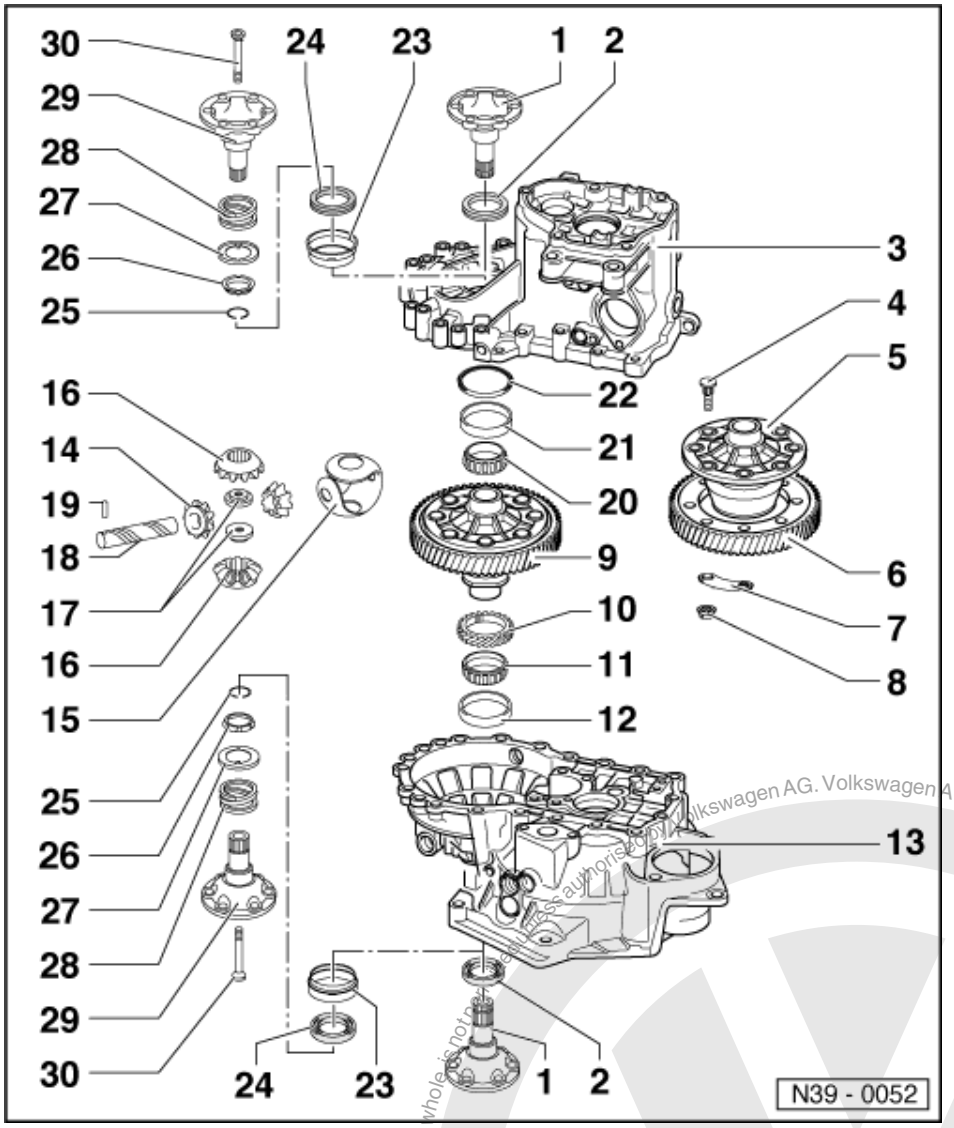

Notes:

- Heat taper roller bearing inner race to 100 °C before installing.
- Always renew both taper roller bearings together as a set.
- If differential housing, gearbox housing or clutch housing taper roller bearings are renewed adjust differential => Page 173 .

1 Flange shaft
- For gearboxes without springs behind flange shafts
- Removing and installing => Page 153

satelettronica
Protected by copyright. Copying for private or commercial purposes, in part or in whole, is not permitted unless authorised by Volkswagen AG. Volkswagen AG does not guarantee or accept any liability with respect to the correctness of information in this document. Copyright by Volkswagen AG.

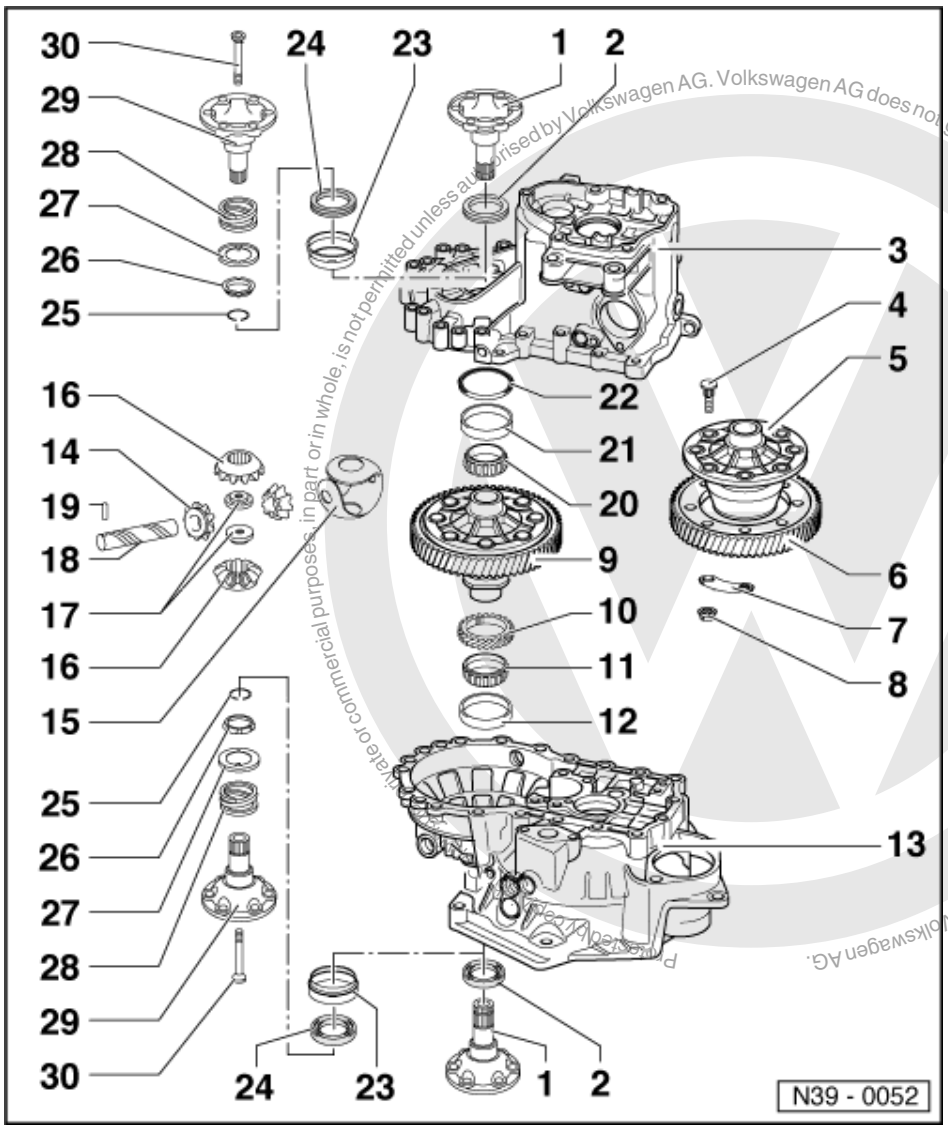

Reproduction for private or commercial purposes, in part or in whole, is not permitted unless authorised by Volkswagen AG. Volkswagen AG does not guarantee or accept any liability with respect to the correctness of information in this document. Copyright by Volkswagen AG.

satelettronica

2 Oil seal
- For gearboxes without springs behind flange shafts
- Renewing => Page 153

3 Gearbox housing

4 Bolt

5 Differential cage
- Bolt to final drive gear
- Both sides are chamfered to accept taper rings (item 26) in gearboxes with springs behind flange shafts => Fig. 7

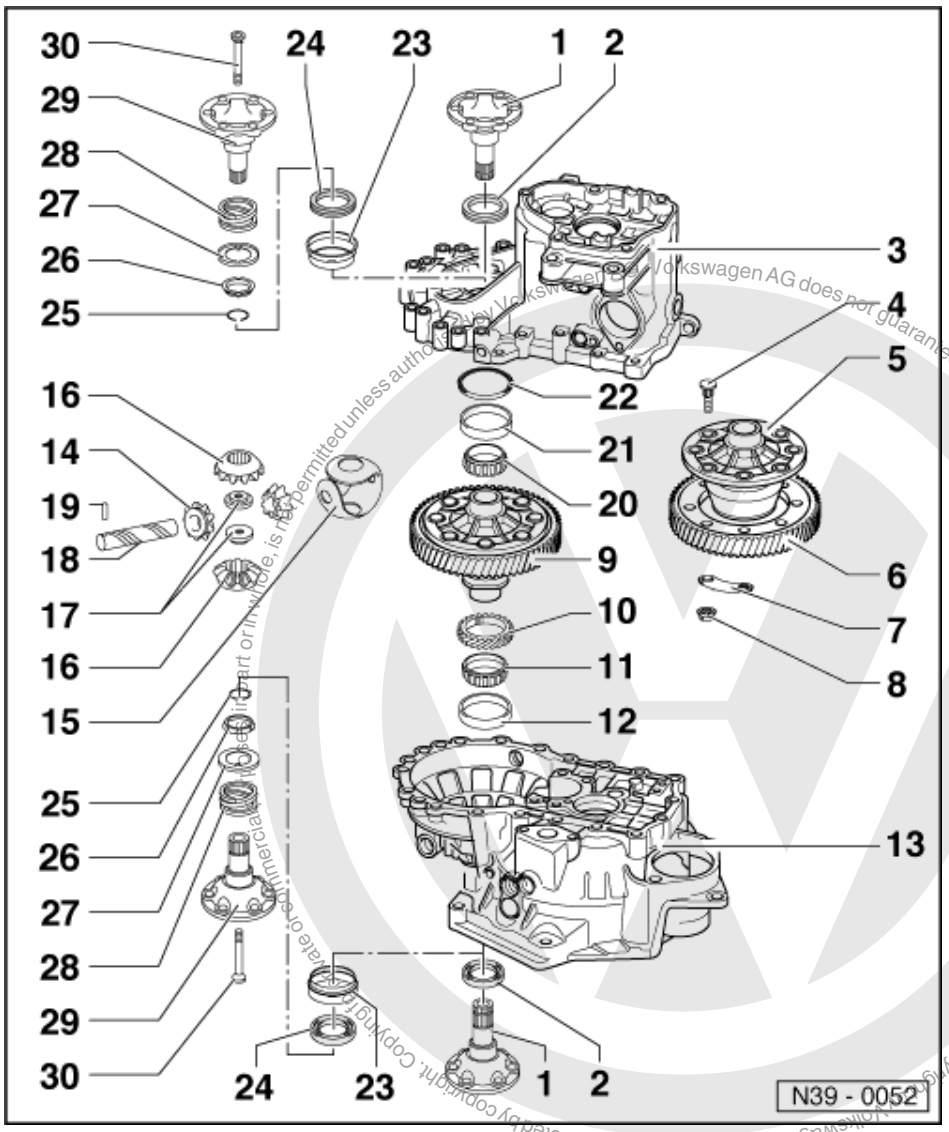

6 Final drive gear wheel
- Rivetted in production
- Bolted => Fig. 11
- Heat to 100 °C before installing
- Pressing off => Fig. 9
- Fit to differential housing => Fig. 10
- Is paired with output shaft, only renew as a set

7 Packing plate

8 Nut, 70 Nm

satelettronica

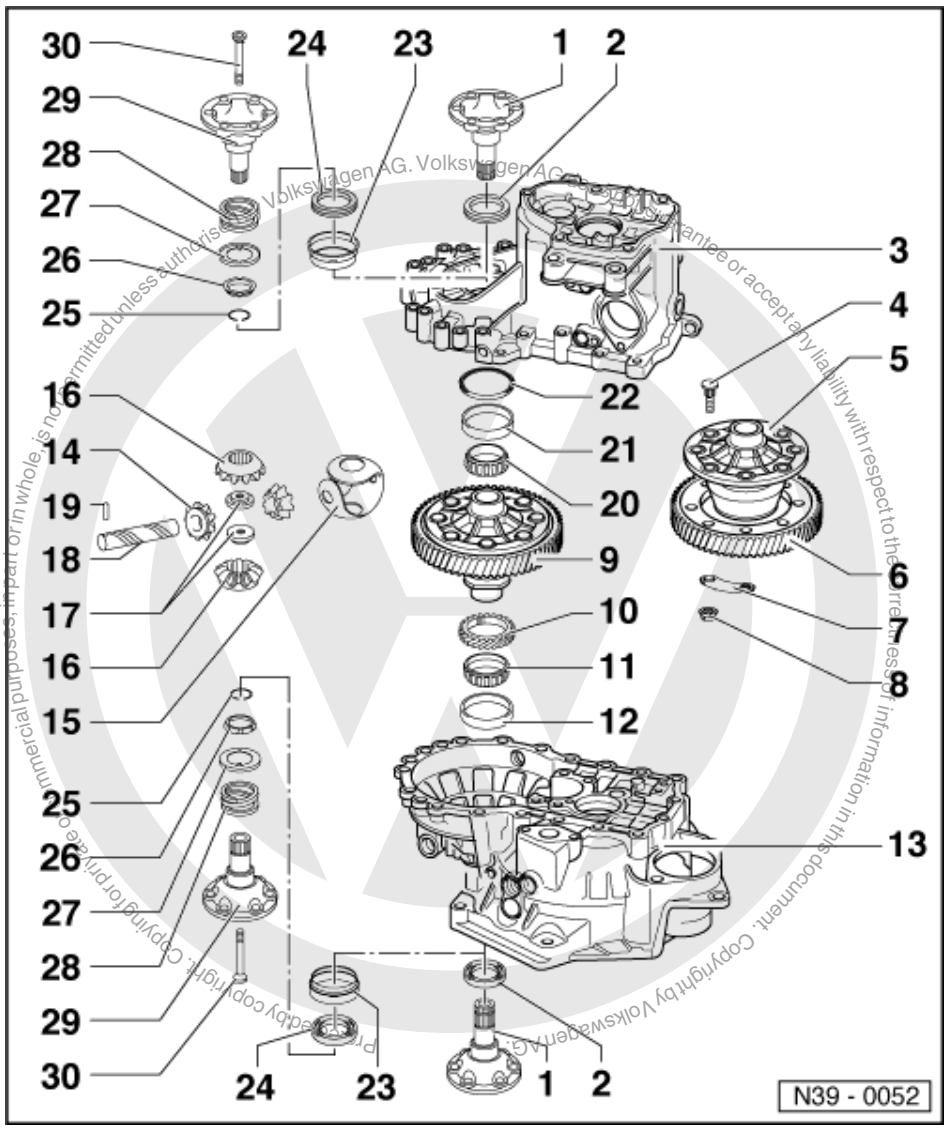

9 Differential housing

- With rivetted final drive gear
- When renewing final drive gear drill out rivet heads => Fig. 8
- Attaching final drive gear with bolts => Fig. 8
- Both sides are chamfered to accept taper rings (item 26) in gearboxes with springs behind flange shafts => Fig. 7

10 Speedometer drive wheel

- Fit on differential housing before pressing on inner race

satelettronica

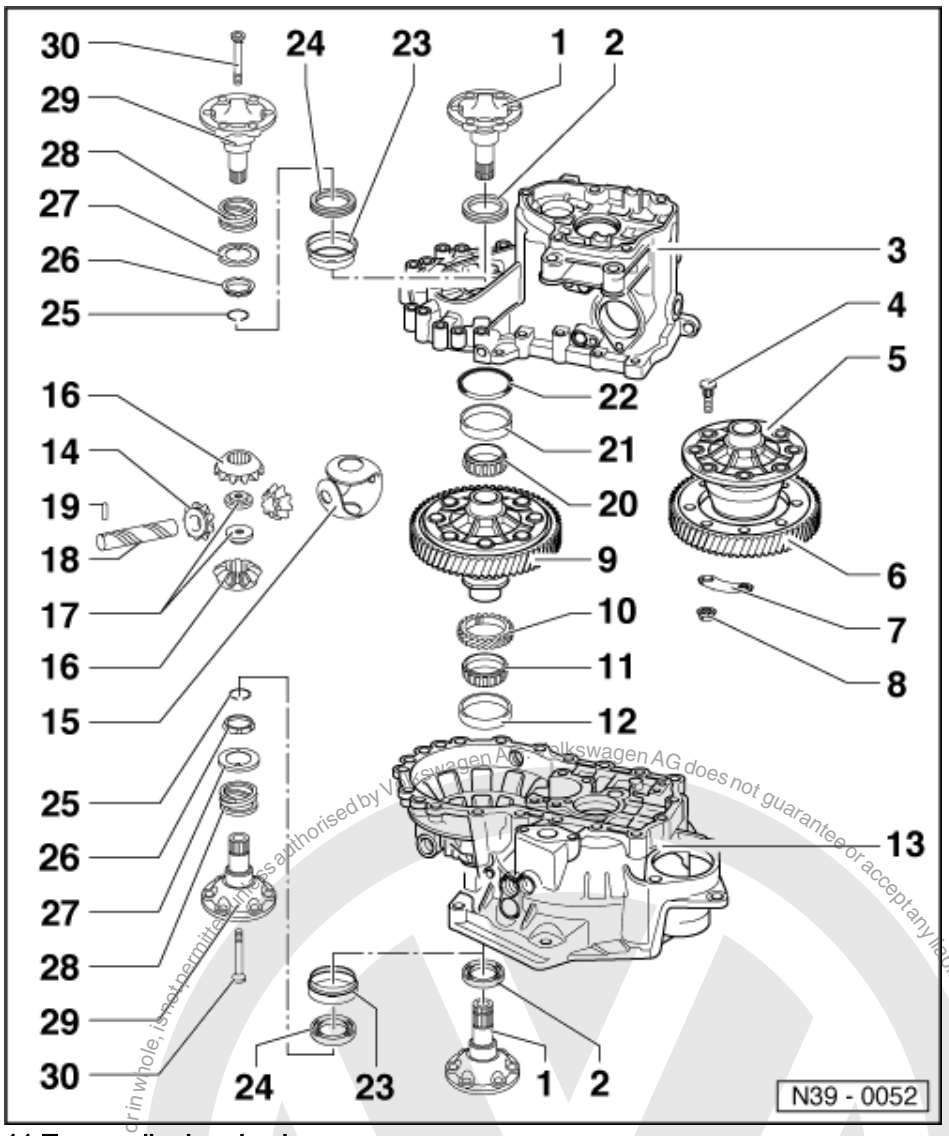

11 Taper roller bearing inner race
- Pulling off => Fig. 3
- Pressing on => Fig. 4

12 Taper roller bearing outer race
- Knocking out => Fig. 1
- Pressing in => Fig. 2

13 Clutch housing

14 Planet pinion
- Installing in gearboxes without springs behind flange shafts => Fig. 14
- Installing in gearboxes with spring behind flange shaft => Fig. 15

15 One-piece thrust washer
- Coat with gearbox oil when installing

satelettronica

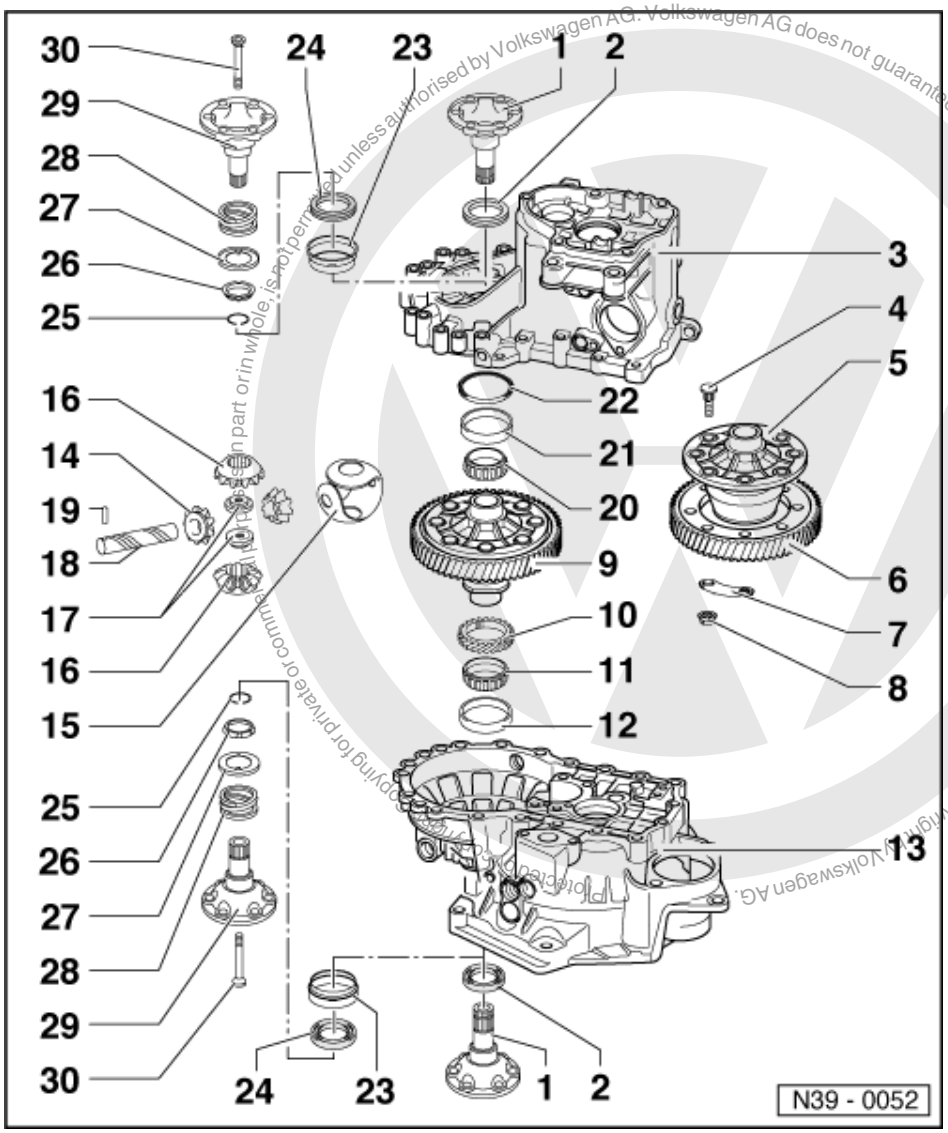

16 Sun wheel

- Distinguishing sun wheels => Fig. 13
- Installing in gearboxes without springs behind flange shafts => Fig. 14
- Installing in gearboxes with springs behind flange shafts => Fig. 15

17 Threaded piece

- Installed in conjunction with springs behind flange shafts => Fig. 15

Volkswagen AG. Volkswagen AG does not guarantee or accept any liability with respect to the correctness of information in this document. Copyright by Volkswagen AG. Copying for private or commercial purposes, in part or in whole, is not permitted unless authorised by Volkswagen AG.
satelettronica

Protected by copyright. Copying for private or commercial purposes, in part or in whole, is not permitted unless authorised by Volkswagen AG. Volkswagen AG does not guarantee or accept any liability with respect to the correctness of information in this document. Copyright by Volkswagen AG.

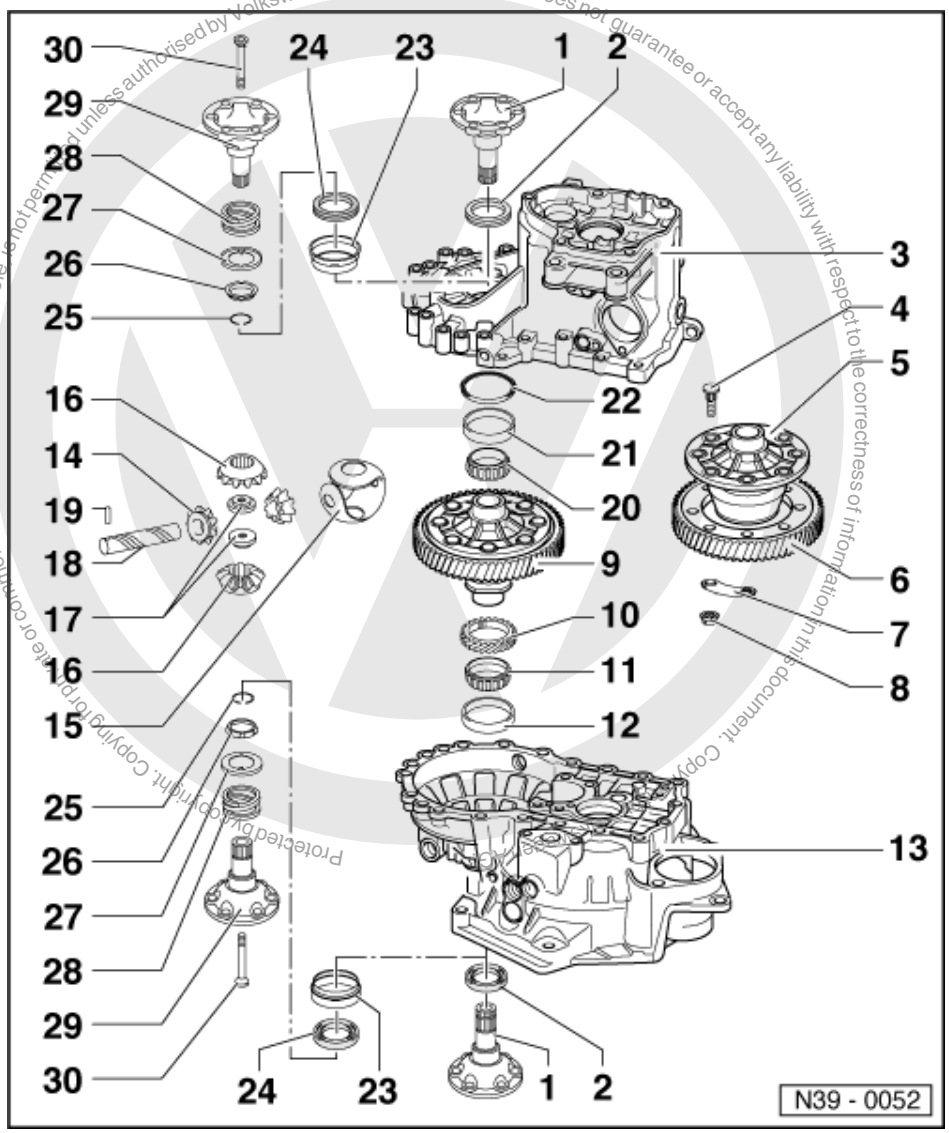

18 Planet pinion axis shaft

- Knock out with drift
- Installing in gearboxes without springs behind flange shafts => Fig. 14
- Installing in gearboxes with springs behind flange shafts => Fig. 15

19 Spring pin

- For securing planet pinion axis shaft
- Removing and installing => Fig. 12

20 Taper roller bearing inner race

- Pulling off => Fig. 3
- Pressing on => Fig. 4

satelettronica

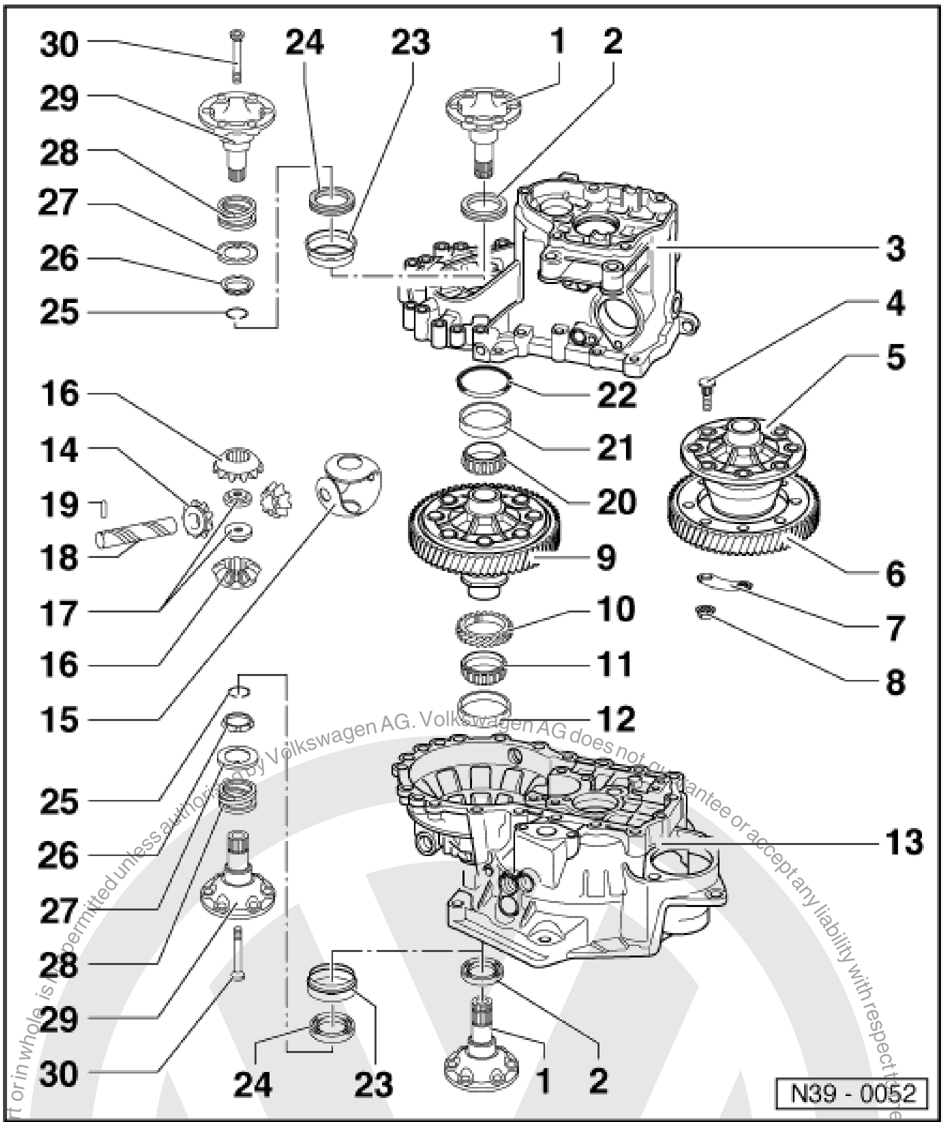

21 Taper roller bearing outer race

- Pulling out => Fig. 5
- Pressing in => Fig. 6

22 Shim

- For differential
- Determining thickness => Page 173

23 Sleeve

- Installed in conjunction with springs behind flange shafts
- To accept oil seal (item 24)
- Removing and installing
  => Page 95

24 Oil seal

- In conjunction with springs behind flange shafts
- Renewing => Page 154

Protected by copyright. Copying for private or commercial purposes, in part or in whole, is not permitted unless authorised by Volkswagen AG. Volkswagen AG does not guarantee or accept any liability with respect to the correctness of information in this document. Copyright by Volkswagen AG.

sateletronica

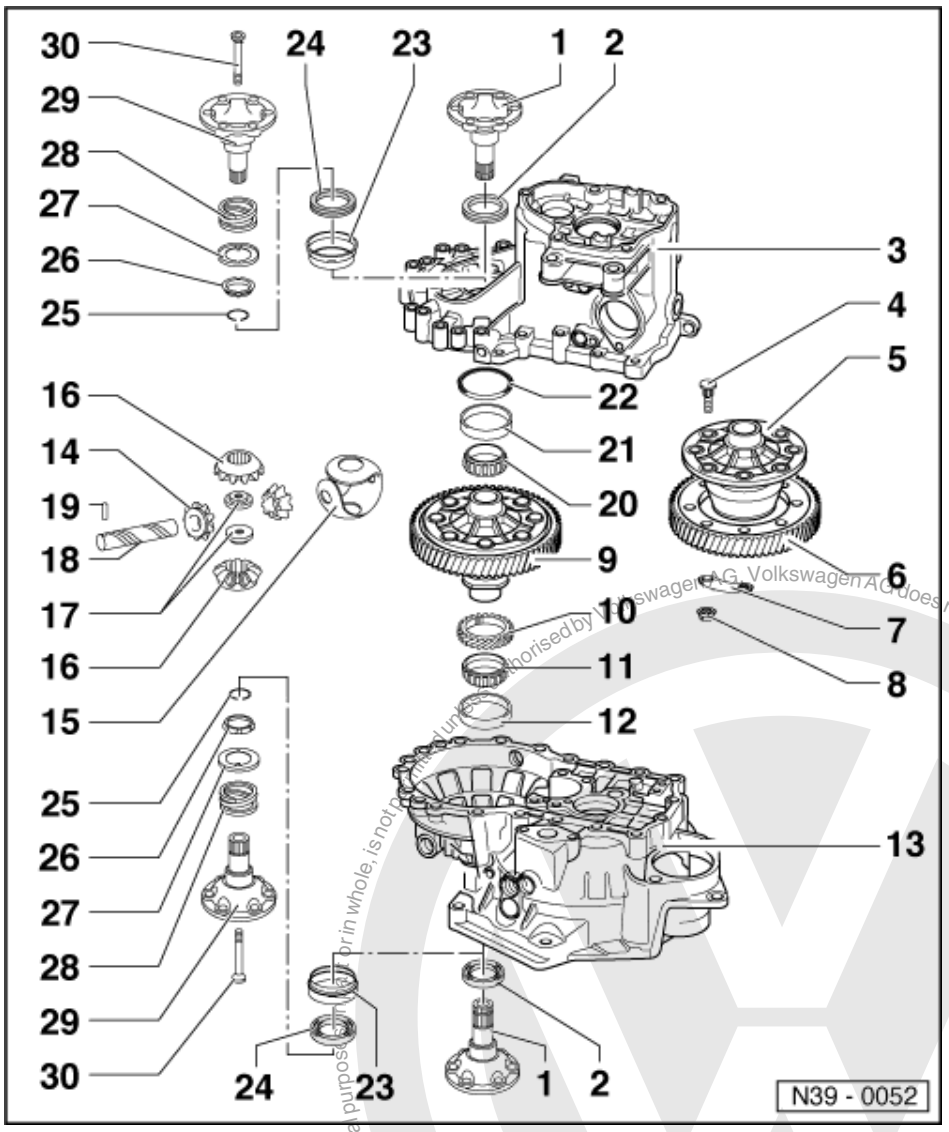

25 Circlip

- Installed in conjunction with springs behind flange shafts
- Ensures taper ring, thrust washer and spring are held in position when flange shaft is removed

26 Tapered ring

- Installed in conjunction with springs behind flange shafts
- With grooves to secure thrust washer
- Installation position: Taper towards differential housing

27 Thrust washer

- Installed in conjunction with springs behind flange shafts
- Installation position:
  Shoulder towards spring, tongue to tapered ring

Protected by copyright. Copyright by Volkswagen AG.
Volkswagen AG does not guarantee or accept any liability with respect to the correctness of information in this document.
satelettronica

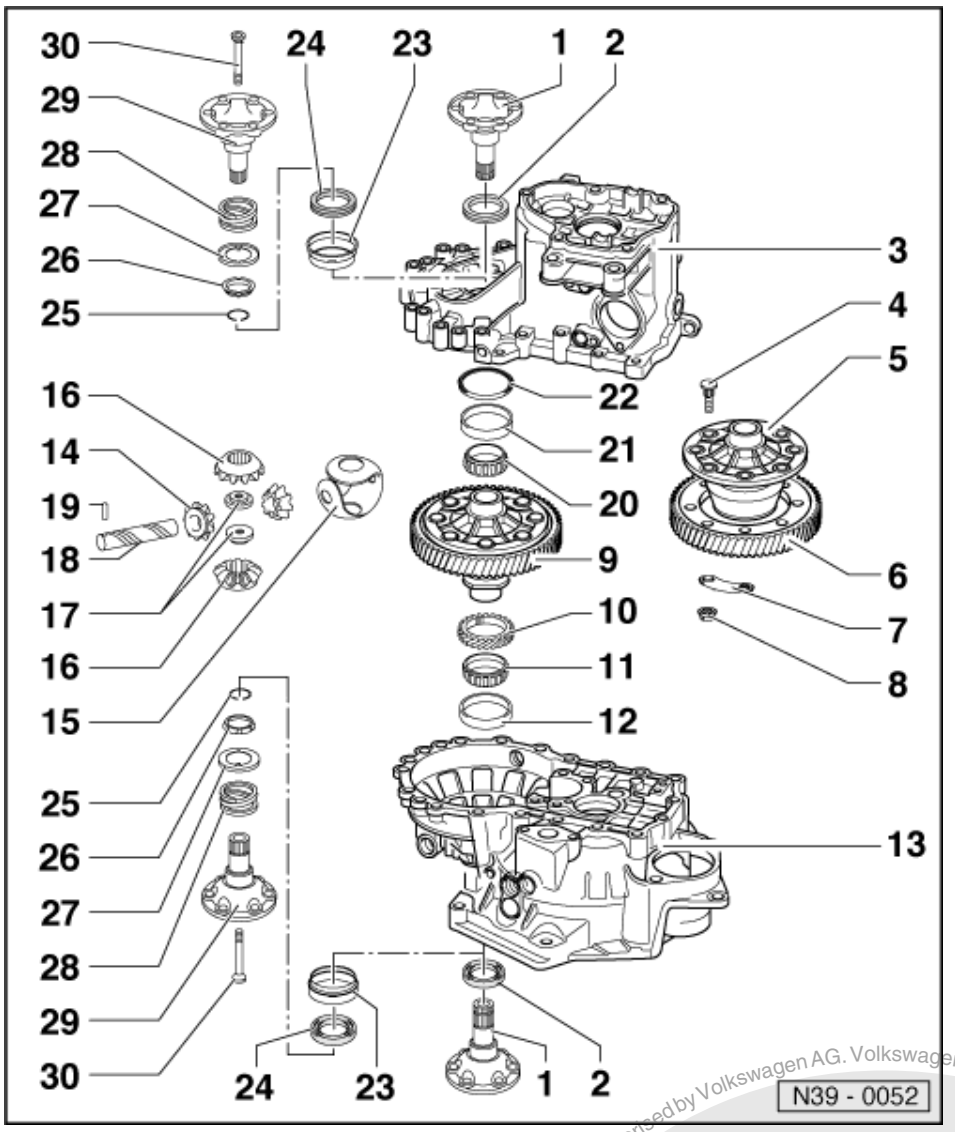

28 Spring for flange shaft

- Installed behind flange shafts
- Allocation to gearbox with springs behind flange shafts => Page 2

29 Flange shaft

- With drilling for cone head bolt
- Installed in gearboxes with springs behind flange shafts
- Removing and installing
  => Page 154

30 Cone head bolt, 25 Nm

- Installed in conjunction with springs behind flange shafts
- Bolt into threaded piece (item 17)

Protected by copyright. Copying for private or commercial purposes, in part or in whole, is not permitted unless authorised by Volkswagen AG. Volkswagen AG does not guarantee or accept any liability with respect to the correctness of information in this document. Copyright by Volkswagen AG.
satelettronica

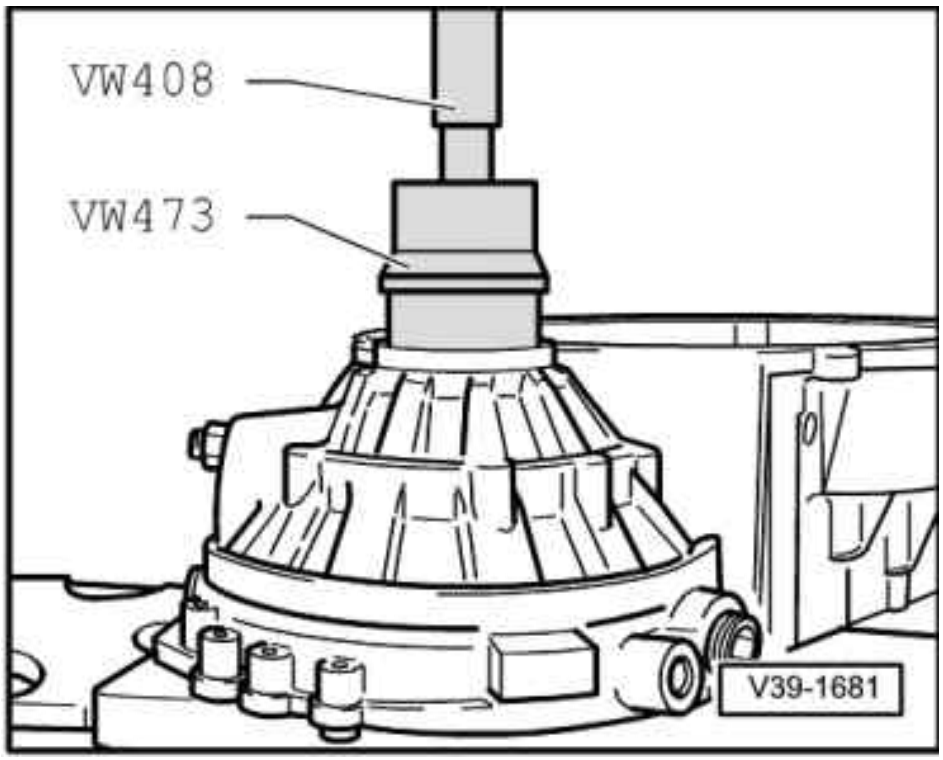

-> Fig.1 Knocking taper roller bearing outer race out of clutch housing

- First remove flange shaft seal mounting sleeve on gearboxes with springs behind flange shaft.

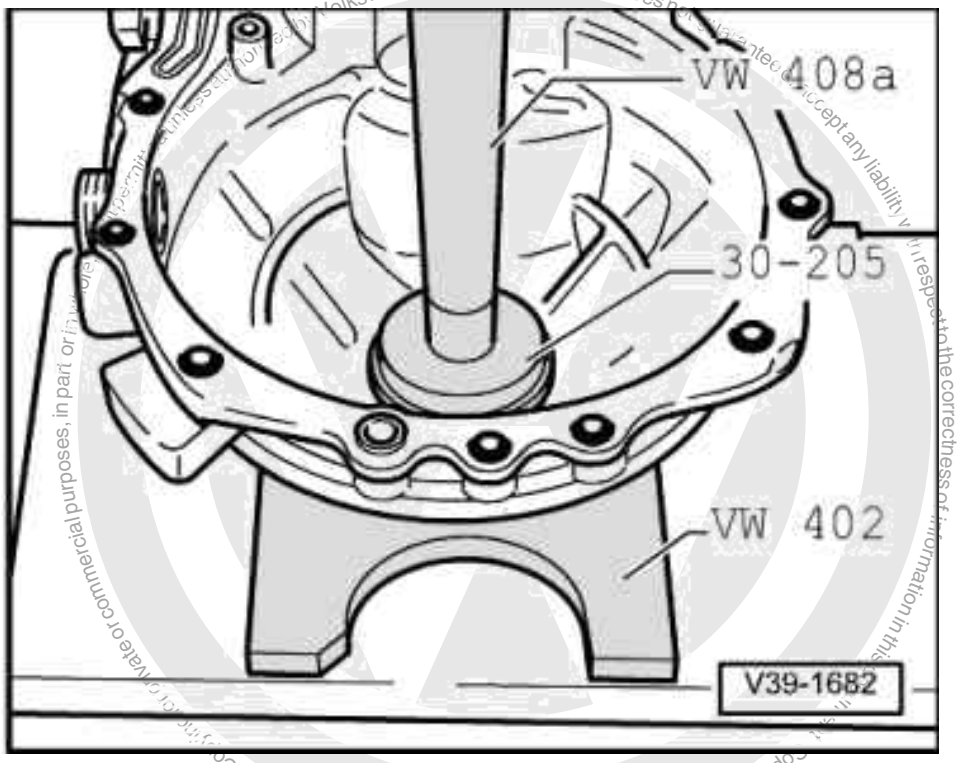

satelettronica

Copyright by Volkswagen AG. Volkswagen AG does not guarantee or accept any liability with respect to the correctness of information in this document. Copyright by Volkswagen AG. whole, is not permitted unless authorised by Volkswagen AG.

-> Fig.2 Pressing taper roller bearing outer race into clutch housing

No shim is installed in the clutch housing end.

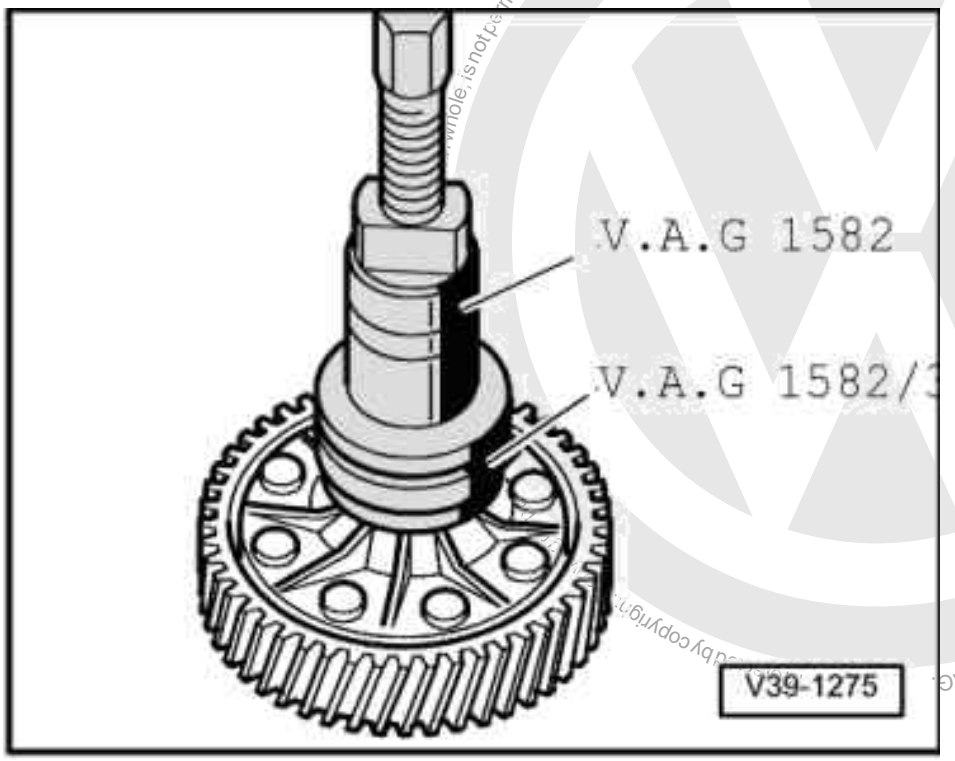

-> Fig.3 Pulling off taper roller bearing inner race

- Before fitting the extractor position press piece 40-105 on differential housing.

Note:

Both both taper roller bearing inner races are pulled off the differential housing in the same way.

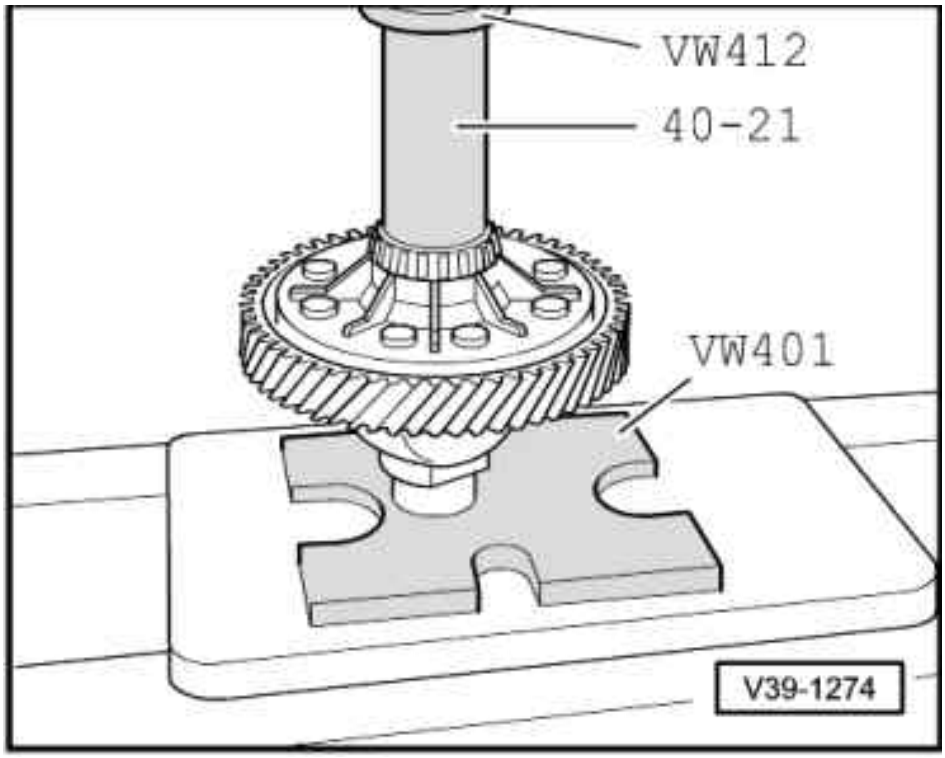

satelettronica

-> Fig.4 Pressing on taper roller bearing inner race

Note:

The taper roller bearing inner races for gearbox housing and clutch housing are pressed on with the same press tools.

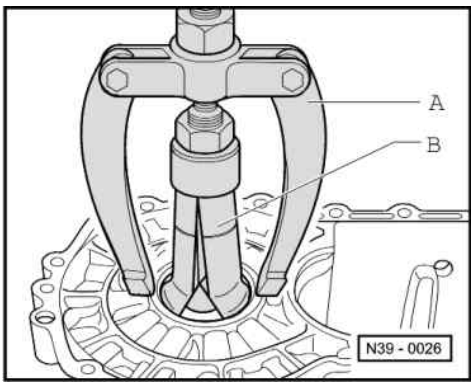

-> Fig.5 Pulling taper roller bearing outer race out of gearbox housing

A - Counter support, e.g. Kukko 22/2

B - Internal puller 46...58 mm, e.g. Kukko 21/7

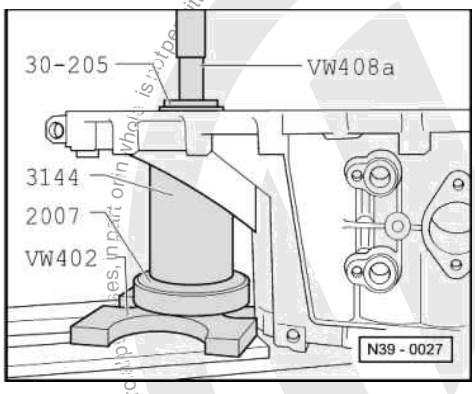

-> Fig.6 Pressing taper roller bearing outer race into gearbox housing

- Fit shim under outer race.
- Support gearbox housing with sleeve 3144 directly below bearing mounting.

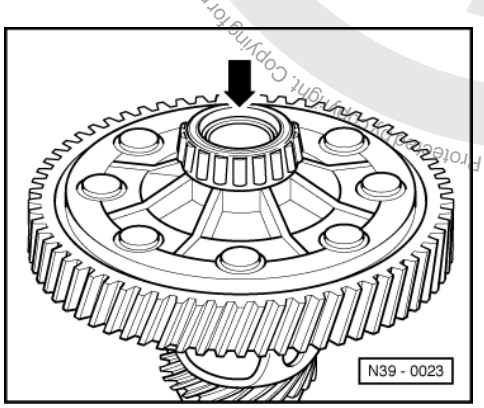

satelettronica

-> Fig.7 Both sides of differential housing are chamfered (arrow) to accept tapered rings/springs

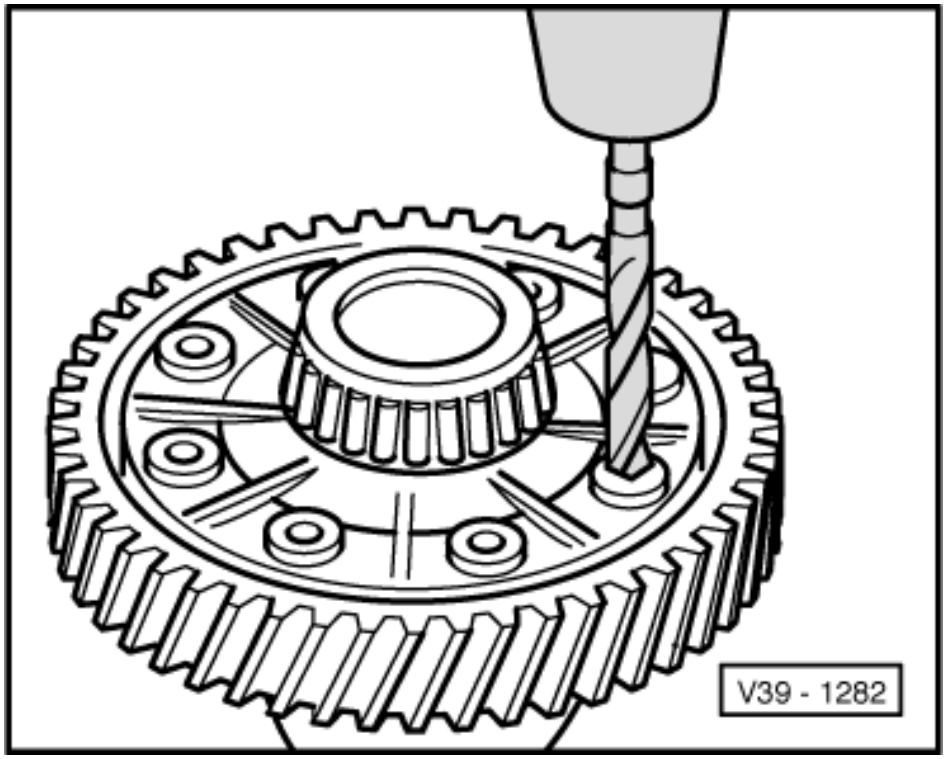

-> Fig.8 Drilling out rivet heads

- Drill out rivet heads with 12 mm drill from countersunk side and knock-out with drift.

Warning!
Clean differential before and after drilling and protect taper roller bearings from swarf.

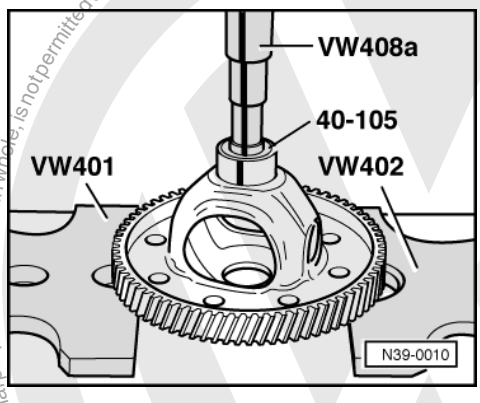

-> Fig.9 Pressing off final drive gear

- Place thrust piece 40-105 on differential housing.

Note:

Thrust piece 40-105 can be used with all differential housings.

Protected by copyright. Copying for private or commercial purposes, in part or in whole, is not permitted unless authorised by Volkswagen AG. Volkswagen AG does not guarantee or accept any liability with respect to the correctness of information in this document. Copyright by Volkswagen AG.

satelettronica

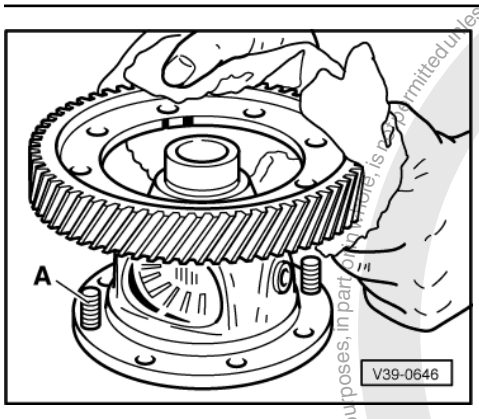

-> Fig.10 Heating final drive gear wheel to approx. 100 °C and installing

- Use bolts -A- from repair kit to guide final drive gear into position during installation.

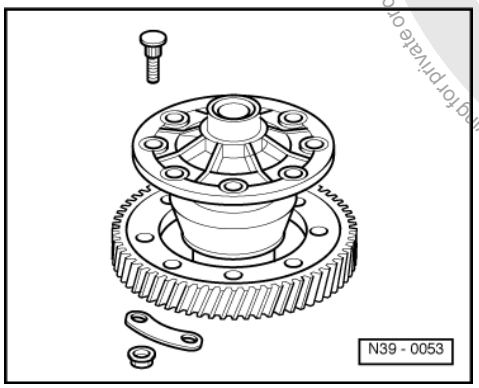

-> Fig.11 Bolting final drive gear and differential housing together

Use special bolts Part No. 02A 498 088 A with plates and nuts.

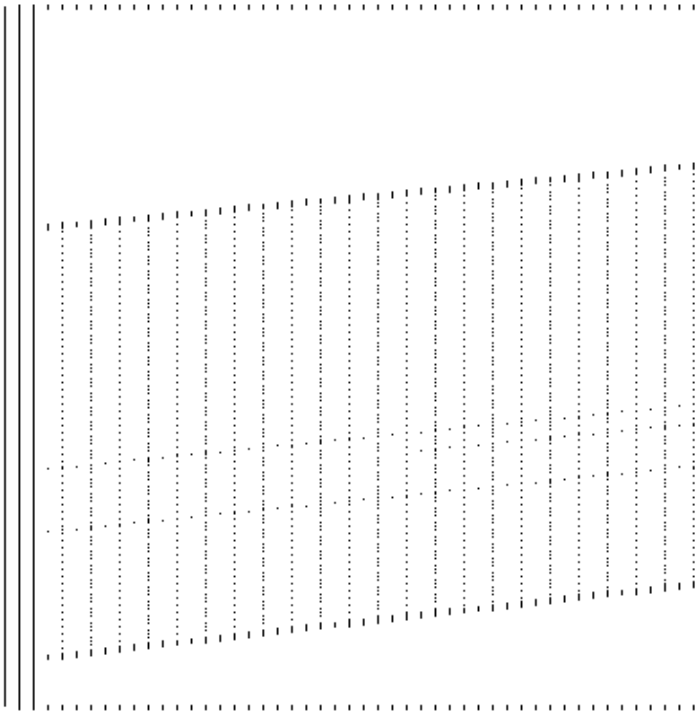

Protected by copyright. Copying for private or commercial purposes, in part or whole, is not permitted unless authorised by Volkswagen AG. Volkswagen AG does not guarantee or accept any liability with respect to the correctness of information in this document. Copyright by Volkswagen AG.
satelettronica

-> Fig.12 Removing and installing planet wheel axis shaft spring pin

Removing

- Cover taper roller bearing inner race and speedometer drive gear to avoid possible damage and ingress of metal particles.
- Knock-out spring pin with chisel, inserting chisel into circumferential groove.

Installing

- Knock fully into the differential housing.

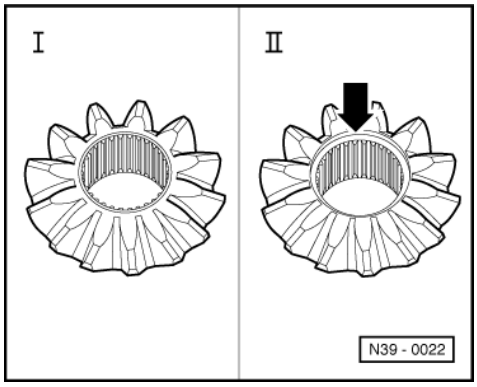

-> Fig.13 Distinguishing sun wheels

Gearbox with springs behind flange shafts	Sun wheel without recess (I)
Gearbox without springs behind flange shafts	Sun wheels with recess (II)

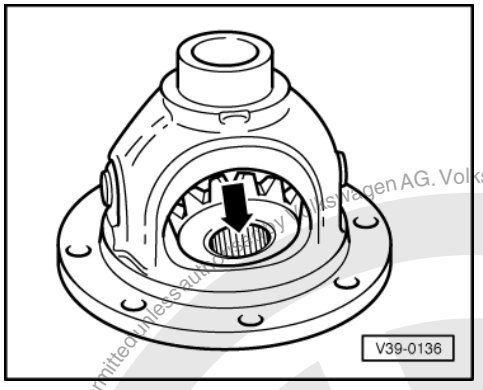

-> Fig.14 Installing sun and planet wheels in gearboxes without springs behind flange shafts

- Lubricate one-piece thrust washer with gearbox oil and install.
- Insert planet pinions, knock-in planet pinion axis shaft
- Drive in new spring pin => Fig. 12
- Insert sun wheels turned through 180°and pivot into position (arrow).

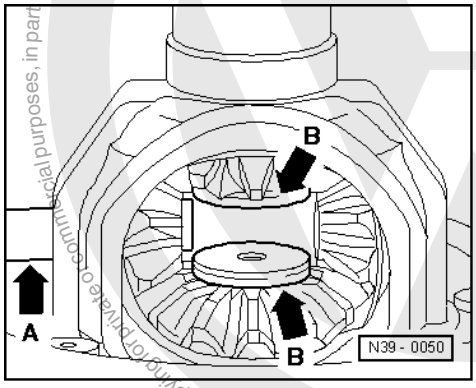

Protected by copyright. Copying for private or commercial purposes, in part or in whole, is not permitted unless authorised by Volkswagen AG. Volkswagen AG does not guarantee or accept any liability with respect to the correctness of information in this document. Copyright by Volkswagen AG
satelettronica

-> Fig.15 Installing sun and planet wheels in gearboxes with springs behind flange shafts

- Lubricate one piece thrust washer with gearbox oil and install.
- Install both sun wheels and secure (e.g. with flange shaft).
- Insert planet wheels turned through 180°and pivot into position.
- Push planet wheel axis shaft (arrow -A-) in until first planet wheel.
- Position threaded piece (arrow -B-) in sun wheels
  Installation position: step towards sun wheel
- Drive planet wheel axle into final position and secure with spring pin.

3 - Adjustment overview

3.1 - Adjustment overview

Note:

If repairs have been carried out to the gearbox it is only necessary to adjust the input shaft, output shaft or differential if components have been renewed which have a direct effect on the adjustment of the gearbox. Refer to the following table to avoid unnecessary adjustment:

		to be adjusted:		
		Input shaft => Page 118	Output shaft => Page 146	Differential => Page 173
Parts renewed:	Gearbox housing	x		x
	Clutch housing	x	x	x
	Input shaft	x		
	Output shaft (final drive)		x	
	Differential housing			x
	Input shaft taper roller bearing	x		
	Output shaft taper roller bearing		x	
	Differential taper roller bearing			x
	4th gear gear wheel	x		

4 - Adjusting differential

4.1 - Adjusting differential

The differential must be adjusted, when

- Gearbox housing
- Clutch housing
- Differential housing

or the

- Differential taper roller bearing

have been renewed.

Adjustment overview => Page 173 .

Special tools, testers and auxiliary items

- Universal dial gauge bracket VW 387
- Measuring plate VW 385/17

Protected by copyright. Copying for private or commercial purposes, in part or in whole, is not permitted unless authorised by Volkswagen AG. Volkswagen AG does not guarantee or accept any liability with respect to the correctness of information in this document. Copyright by Volkswagen AG.
satelettronica

- Dial gauge
- Thrust plate 30-205

- Pressing in taper roller bearing outer race without shim into clutch housing using thrust piece 30-205 => Page 168 .

Warning!
Taper roller bearing inner and outer races are a matched pair. Do not interchange.

- Pressing taper roller bearing outer race without shim into the gearbox housing using thrust piece 30-205 => Page 169 .
- Fit differential into clutch housing
- Fit gearbox housing and tighten 5 bolts to 25 Nm.

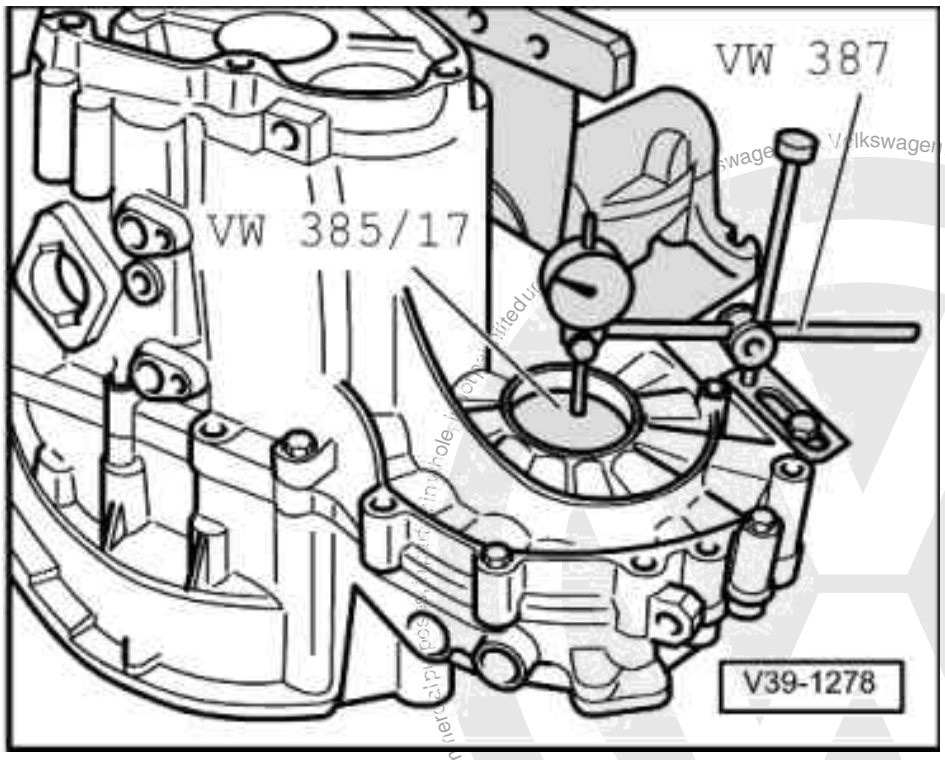

- -> Mount D.T.I. and "0" with 1 mm preload.
- Move differential up and down and recall play indicated on D.T.I. (Example: 0.70 mm)

Warning!
Do not rotate differential during measurement, as this would cause the bearings to settle and result in a false measurement.

Determining shim thickness

The specified bearing preload is obtained by adding a constant figure (0.40 mm) to the reading obtained.

Example:

Reading	0.70 mm
+ Preload (constant figure)	0.40 mm
Thickness of shim =	1.10 mm

- Remove gearbox housing and pull taper roller bearing outer race out from gearbox housing => Page 169 .

Volkswagen AG does not guarantee or accept any liability with respect to the correctness of information in this document. Copyright by Volkswagen AG.
Protected by copyright. Copying for private or commercial purposes, in part or in whole, is not permitted unless authorized by Volkswagen AG.
satelettronica

- Insert shims of correct thickness, thickest shim first.

The following shims are available:

Size (mm)	Part No.
0.65	02A 409 210
0.70	02A 409 210 A
0.75	02A 409 210 B
0.80	02A 409 210 C
0.85	02A 409 210 D
0.90	02A 409 210 E
0.95	02A 409 210 F
1.05	02A 409 210 G
1.05	02A 409 210 H
1.10	02A 409 210 J
1.15	02A 409 210 K
1.20	02A 409 210 L
1.25	02A 409 210 M

If the size of shim required is larger than those listed in the table, insert two shims totalling the correct figure.

Varying tolerances make it possible by measuring the shims to obtain the exact shim thickness required.

- Knock-in outer race again and tighten gearbox housing.

Protected by copyright. Copyright by Volkswagen AG. Volkswagen AG does not guarantee or accept any liability with respect to the correctness of information in this document. Copyright by Volkswagen AG. Unless authorised by Volkswagen AG, is not permitted in whole or in part, for private or commercial purposes.
satelettronica